GW - 49

GENERAL CORRESPONDENCE

YEAR(S):

1990

El Paso
Natural Gas Company

P. O. BOX 1492
EL PASO, TEXAS 79978
PHONE: 915-541-2600

By Federal Express

April 25, 1990

Mr. Roger Anderson
New Mexico Oil Conservation Division
State Land Office Building
310 Old Santa Fe Trail, Room 206
Santa Fe, NM 87503

Reference: **Discharge Plan GW-49**
Blanco Plant
San Juan County, New Mexico

Dear Mr. Anderson:

As we agreed during our telephone conversation on Monday, April 23, 1990, enclosed are the following Blanco Plant facility drainline drawings:

- Process and Waste Management Units — Plate 2-1
- North Area - Wastewater Disposal Plan — Plate 2-2
- Compressor Area - Wastewater Disposal Plan — Plate 2-3
- South Area - Wastewater Disposal Plan — Plate 2-4
- West Area - Wastewater Disposal Plan — Plate 2-5

Please indicate by marking the appropriate drawings as to which drainlines you want us to test. Your immediate attention to this matter is greatly appreciated. Upon completion, please return the drawings to me.

If you have questions, please contact me at 915/541-2407.

Sincerely,

Osias Uribe

Osias Uribe
Environmental Specialist
Environmental and Safety Affairs Department

OU:cds
Enclosures

RECEIVED

APR 26 1990 RB

OIL CONSERVATION DIV.
SANTA FE

ENGINEERING RECORD	
DRAWN BY	Aero-Graphics
TRACED BY	
CHECKED BY	
APPROVED	
DATE	
PHOTO DATE	10-18-82
CONTOUR INTERVAL	2'

200 0 200 400
SCALE IN FEET

El Paso Natural Gas Company
PIPELINE SERVICES DIVISION

RECEIVED
APR 26 1990
OIL CONSERVATION DIV.
SANTA FE

BLANCO PLANT
PROCESS AND WASTE MANAGEMENT UNITS

PLATE 2-1

SHEET 1 OF 1

REV.

LEGEND

DWG. NO.	TITLE

REFERENCE DRAWINGS

NO.	DATE	BY	DESCRIPTION	W. O.	APP.

REVISIONS

PRT.	SEP.	DATE	TO	W. O.	PRT.	SEP.	DATE	TO	W. O.

PRINT RECORD

ENG. RECORD		DATE
DRAFTING DESIGN	JC	9/1/83
COMPUTER GRAPHICS	FB	9/6/83
CHECKED		
PROJECT APPROVAL		
DESIGN APPROVAL		
COMPUTER SAVE NAME	BLA135	

El Paso Natural Gas Company

RECEIVED
APR 26 1990
OIL CONSERVATION DIV.
SANTA FE

BLANCO PLANT
NORTH AREA PLAN
WASTE WATER DISPOSAL PLAN

SCALE: 1" 50'
W. O.

PLATE 2-2

REV

LEGEND		

DWG. NO.	TITLE
REFERENCE DRAWINGS	

NO.	DATE	BY	DESCRIPTION	W. O.	APP.
REVISIONS					

PRT.	SEP.	DATE	TO	W. O.	PRT.	SEP.	DATE	TO	W. O.
PRINT RECORD									

ENG. RECORD		DATE
DRAFTING DESIGN	JC	9/1/83
COMPUTER GRAPHICS	FB/KS	9/6/83
CHECKED		
PROJECT APPROVAL		
DESIGN APPROVAL		
COMPUTER SAVE NAME	BLA133	

El Paso Natural Gas Company

RECEIVED
APR 26 1990
OIL CONSERVATION DIV.
SANTA FE

BLANCO PLANT
COMPRESSOR AREA
WASTE WATER DISPOSAL PLAN

SCALE: 1"=50'
W. O.

PLATE 2-3

REV.

LEGEND

DWG. NO.	TITLE

REFERENCE DRAWINGS

NO.	DATE	BY	DESCRIPTION	W. O.	APP.

REVISIONS

PRT.	SEP.	DATE	TO	W. O.	PRT.	SEP.	DATE	TO	W. O.

PRINT RECORD

ENG. RECORD		DATE
DRAFTING DESIGN	JC	9/1/83
COMPUTER GRAPHICS	FB	9/6/83
CHECKED		
PROJECT APPROVAL		
DESIGN APPROVAL		
COMPUTER SAVE NAME	BLA136	

El Paso Natural Gas Company

RECEIVED
APR 26 1990
OIL CONSERVATION DIV.
SANTA FE

BLANCO PLANT
SOUTH AREA PLAN
WASTE WATER DISPOSAL PLAN

SCALE 1"=50'
W. O.

PLATE 2-4

REV.

LEGEND	REFERENCE DRAWINGS	REVISIONS	PRINT RECORD
	DWG NO / TITLE	NO / DATE / BY / DESCRIPTION / W. O. / APP	PRI / SEP / DATE / TO / W. O.

ENG. RECORD		DATE
DRAFTING DESIGN	JC	9/1/83
COMPUTER GRAPHICS	FB	9/6/83
CHECKED		
PROJECT APPROVAL		
DESIGN APPROVAL		
COMPUTER SAVE NAME	BLA134	

El Paso Natural Gas Company

RECEIVED
APR 26 1990
OIL CONSERVATION DIV.
SANTA FE

BLANCO PLANT
WEST AREA PLAN
WASTE WATER DISPOSAL PLAN

SCALE: 1" 50'
W. O.

PLATE 2-5

REV.

Form 7-18A (10-58)

El Paso Natural Gas Company
LETTER OF TRANSMITTAL

TO Tony Gelat

DATE 10-23-89

FROM Fred Trudeau

PLACE Central Eng. Drafting

RE Blanco Plant Secondary Containment Dikes W.O.s K 5431, K 5432, K5433, L 3973 & A 8770

WE ATTACH HERETO THE FOLLOWING: Dwgs. For Bid

NO. OF COPIES	DRAWING OR BILL OF MATERIAL NO. MANUFACTURER'S NAME IF REQUIRED	DESCRIPTION
8	STD-1-M2	2BP-8-M107 Rev. 6
	2BP-1-M86	2BP-8-M108 Rev. 5
	2BP-1-M87	2BP-8-M109 Rev. 7
	2BP-1-M88	2BP-8-M81 Rev. 5
	2BP-1-M89	2BP-8-P279 Rev. 3
	2BP-1-M90	
	2BP-1-M91	
	2BP-1-M92	
	2BP-1-M93	
	2BP-1-M94	
	2BP-1-M95	
	2BP-1-M96	
	2BP-1-M97	
	2BP-1-M98	
	2BP-1-M99	
	2BP-1-M100	
	2BP-1-M101	
	2BP-1-M102	

CC:

SIGNED FRED TRUDEAU by WLC

2BP-8-M81	CRUDE OIL FEED STORAGE	
2BP-1-M93	FIELD DRIP STORAGE	
2BP-1-M92	BOTTOMS STORAGE AREA	
2BP-1-M91	FRACTIONATOR AREA	
2BP-1-M90	BOILER PLANT & SHIPPING PUMP	
2BP-1-M89	MISC. TANKS AND DRUMS	
2BP-1-M88	MISC. TANKS	
2BP-1-M87	LUBE OIL TANKS	
DWG. NO.	TITLE	

LEGEND — REFERENCE DRAWINGS — REVISIONS (NO. DATE BY DESCRIPTION W.O. APP.) — PRINT RECORD (PRT. SEP. DATE TO W.O.)

PRT.	SEP.	DATE	TO
1		10/23/89	INSPECTION
4		10/23/89	CONTRACTS

ENG. RECORD		DATE
DRAFTING DESIGN	DPH	10-19-89
COMPUTER GRAPHICS	-	-
CHECKED	AEG	10/22/89
PROJECT APPROVAL	[signature]	10/23/89
DESIGN APPROVAL		
COMPUTER SAVE NAME		

El Paso NATURAL GAS COMPANY

BLANCO GASOLINE ABSORPTION PLANT
SECONDARY CONTAINMENT DIKES
LOCATION PLAN

SCALE: 1" = 100' — W.O.: SEE PLAN — DWG. NO. 2BP-1-M86 — REV.

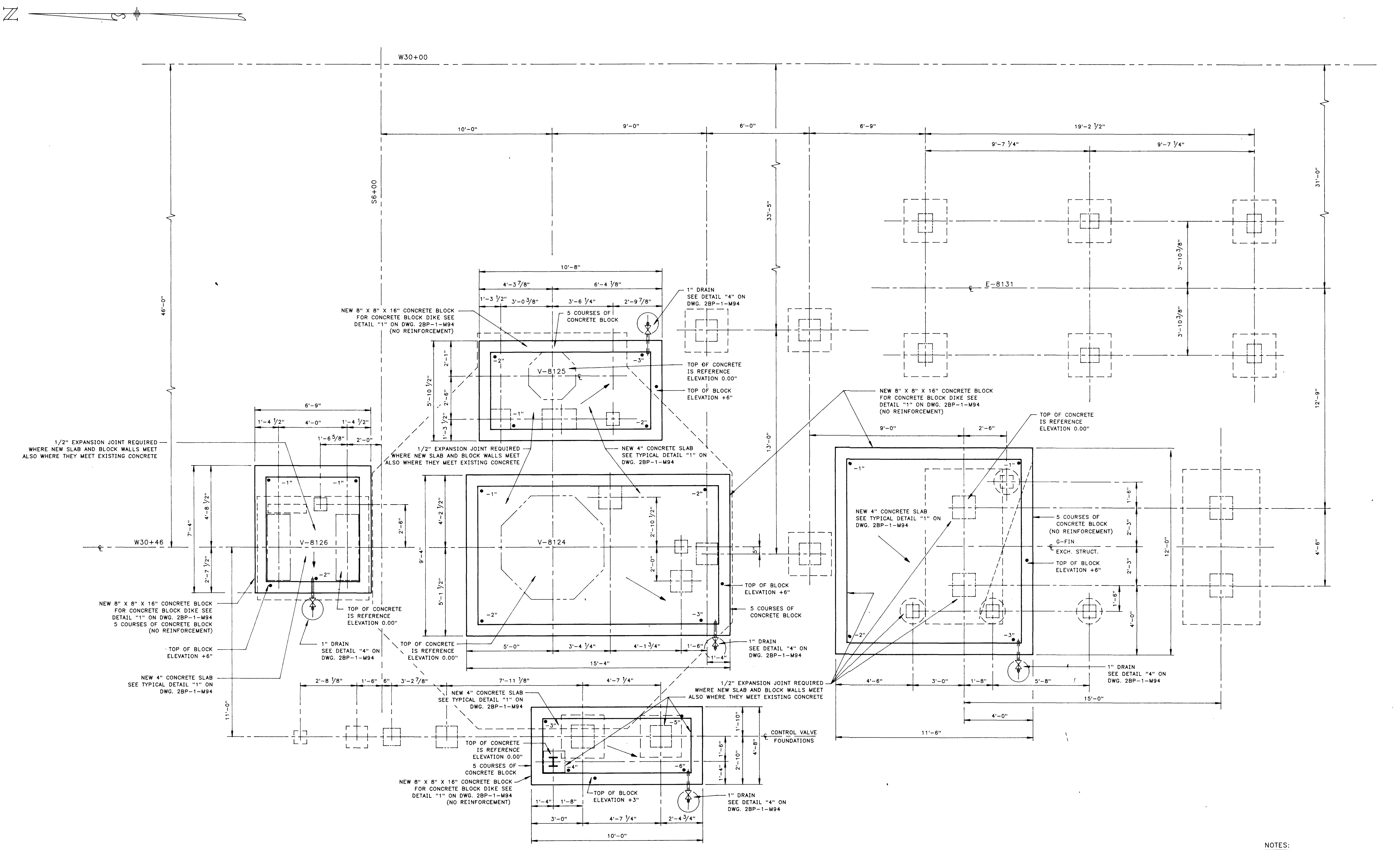

NOTES:

1. REFERENCE ELEVATION IS DIFFERENT FOR EACH DIKE

● DENOTES SPOT ELEVATION ON SLAB

DWG. NO.	TITLE
2BP-1-M86	LOCATION PLAN
2BP-1-M94	CONSTRUCTION DETAILS

REFERENCE DRAWINGS

LEGEND

NO.	DATE	BY	DESCRIPTION	W.O.	APP.

REVISIONS

PRT.	SEP.	DATE	TO	W.O.
1		10/23/89	[illegible]	K-5431
4		10/24/89	[illegible]	K-5431

PRINT RECORD

ENG. RECORD		DATE
DRAFTING DESIGN	DPH	10/89
COMPUTER GRAPHICS	JT	10/11/89
CHECKED	ARS	10/24/89
PROJECT APPROVAL	[illegible]	10/23/89
DESIGN APPROVAL		
COMPUTER SAVE NAME	BLA490	

El Paso NATURAL GAS COMPANY

BLANCO GASOLINE ABSORPTION PLANT
FRACTIONATOR AREA
SECONDARY CONTAINMENT DIKES

SCALE: 3/8"=1'0"
W.O.: K-5431
DWG. NO. 2BP-1-M91
REV.

FM9 (Rev. 8/9/89)

10/21/89

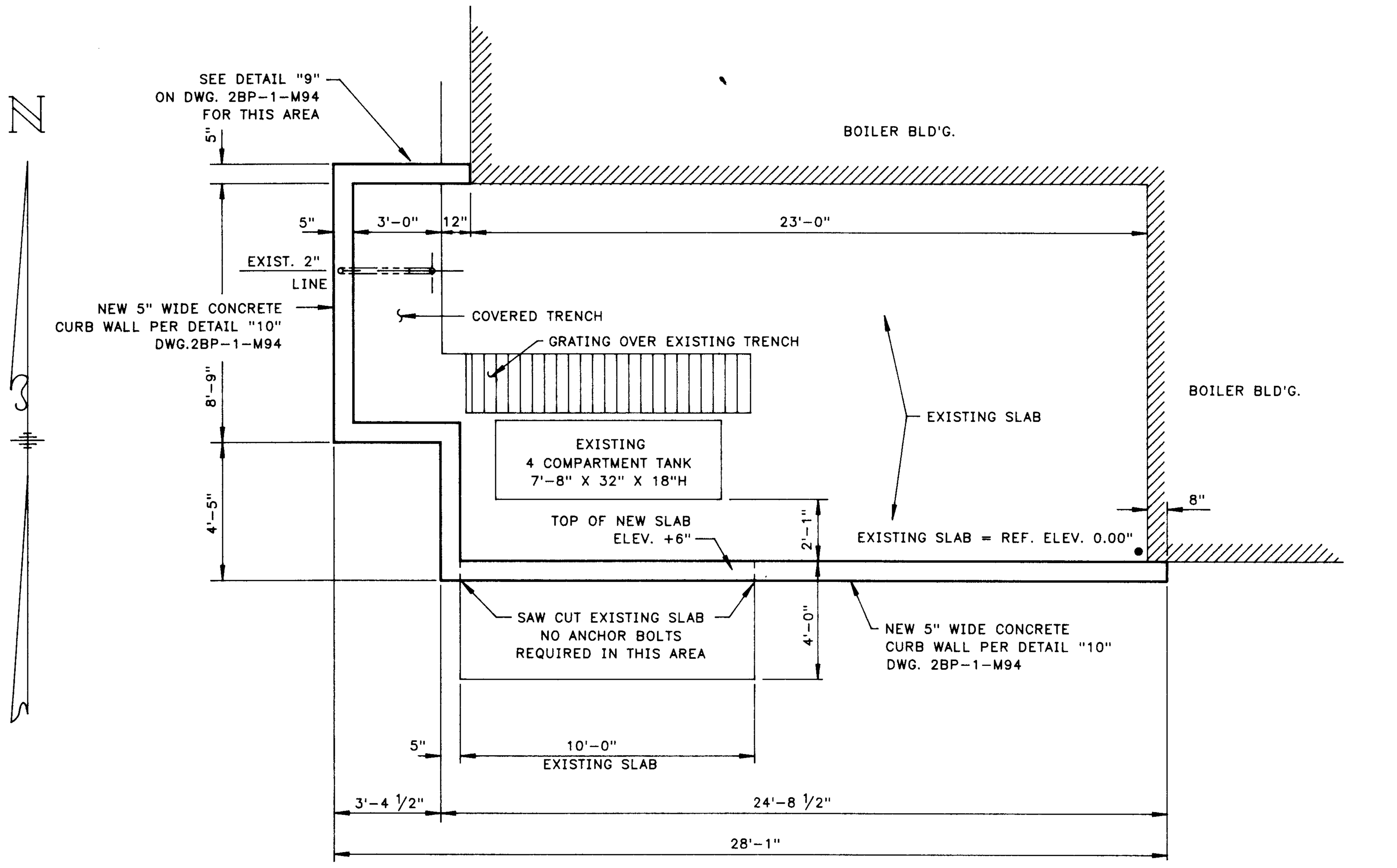

OIL STORAGE AT BOILER HOUSE
CONTAINMENT PLAN

SCALE: 1/4" = 1'-0"

W.O. K-5432

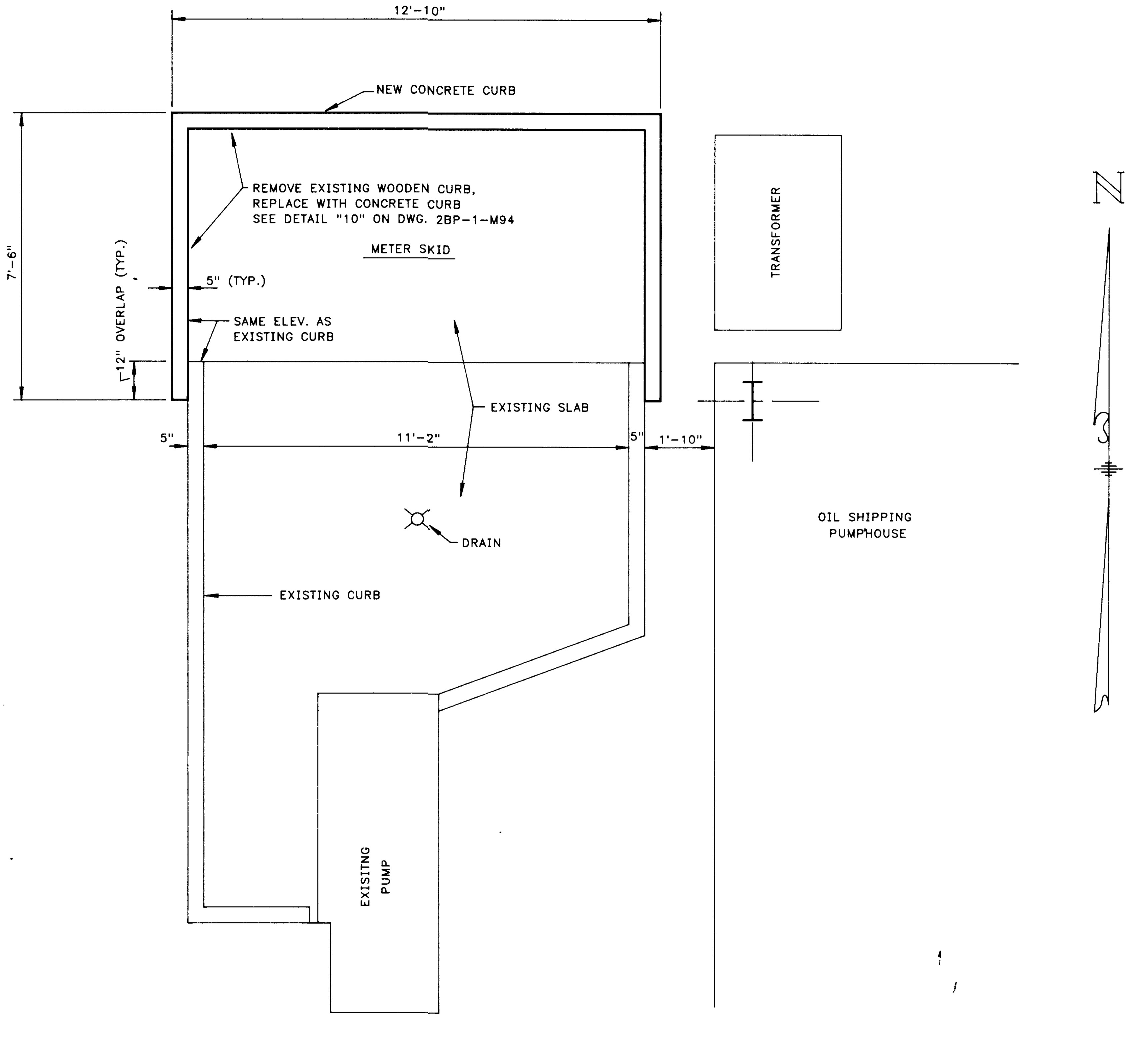

OIL SHIPPING PUMP
CONTAINMENT PLAN

SCALE: 3/8" = 1'-0"

W.O. K-5431

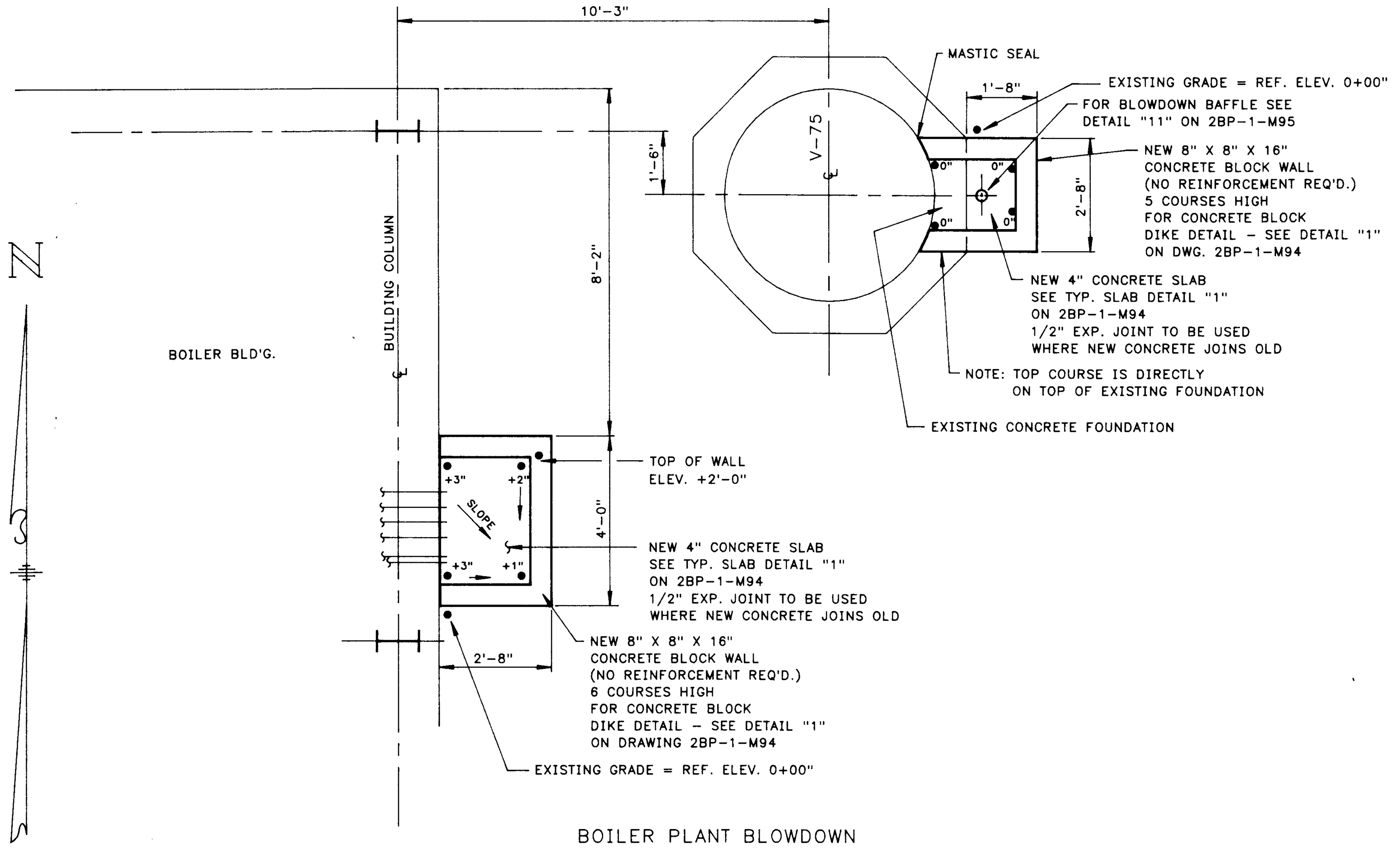

BOILER PLANT BLOWDOWN
CONTAINMENT PLAN

SCALE: 3/8" = 1'-0"

W.O. K-5432

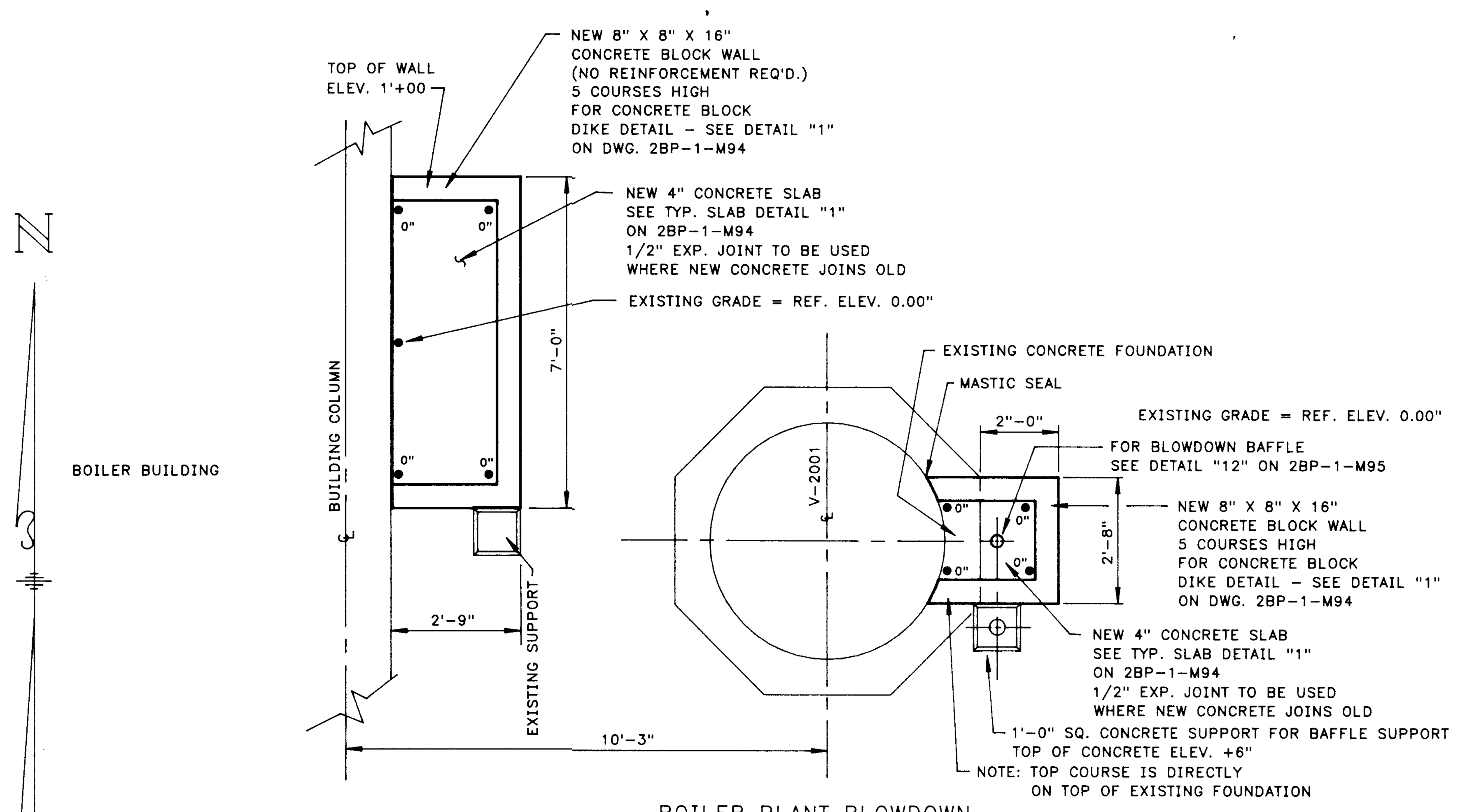

BOILER PLANT BLOWDOWN
CONTAINMENT PLAN

SCALE: 3/8" = 1'-0"

W.O. K-5432

NOTE:
1. ● DENOTES SPOT ELEVATION ON SLAB

LEGEND

FM9 (Rev. 8/9/89)

REFERENCE DRAWINGS

DWG. NO.	TITLE
2BP-1-M95	FOUNDATION DETAILS
2BP-1-M94	FOUNDATION DETAILS
2BP-1-M86	LOCATION PLAN

REVISIONS

NO.	DATE	BY	DESCRIPTION	W.O.	APP.

PRINT RECORD

PRT.	SEP.	DATE	TO	W.O.

ENG. RECORD		DATE
DRAFTING DESIGN	DPH	9-89
COMPUTER GRAPHICS	FB	10/4/89
CHECKED	AEG	10/22/89
PROJECT APPROVAL		10/23/89
DESIGN APPROVAL		
COMPUTER SAVE NAME	BLA489	

El Paso
NATURAL GAS COMPANY

BLANCO PLANT
SECONDARY CONTAINMENT DIKES
BOILER & SHIPPING PUMP AREAS
PLANS

SCALE: NOTED
W.O.: AS NOTED
DWG. NO. 2BP-1-M90
REV.

10/21/89

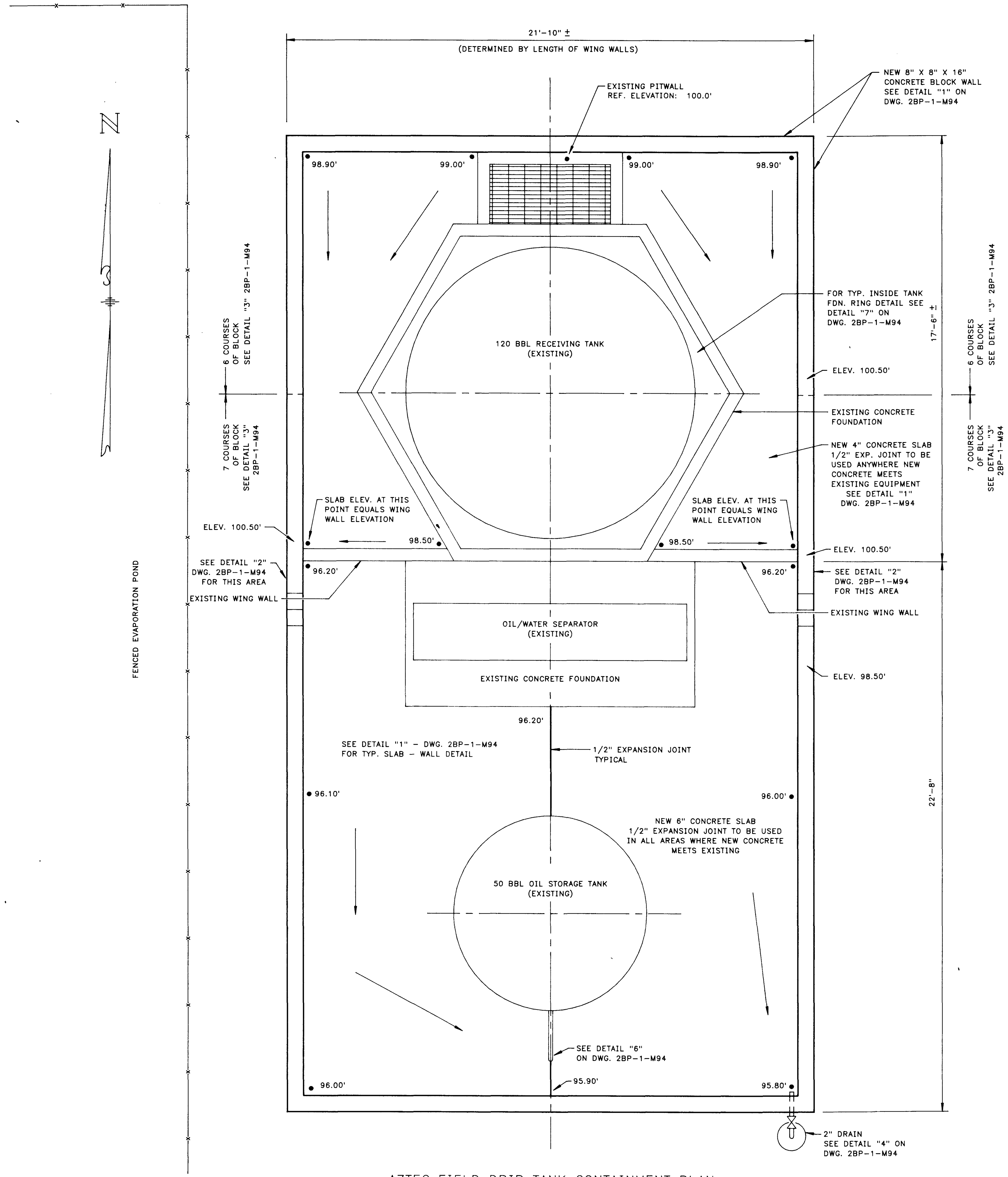

AZTEC FIELD DRIP TANK CONTAINMENT PLAN

SCALE: 3/8" = 1'-0"
W.O. A-8770

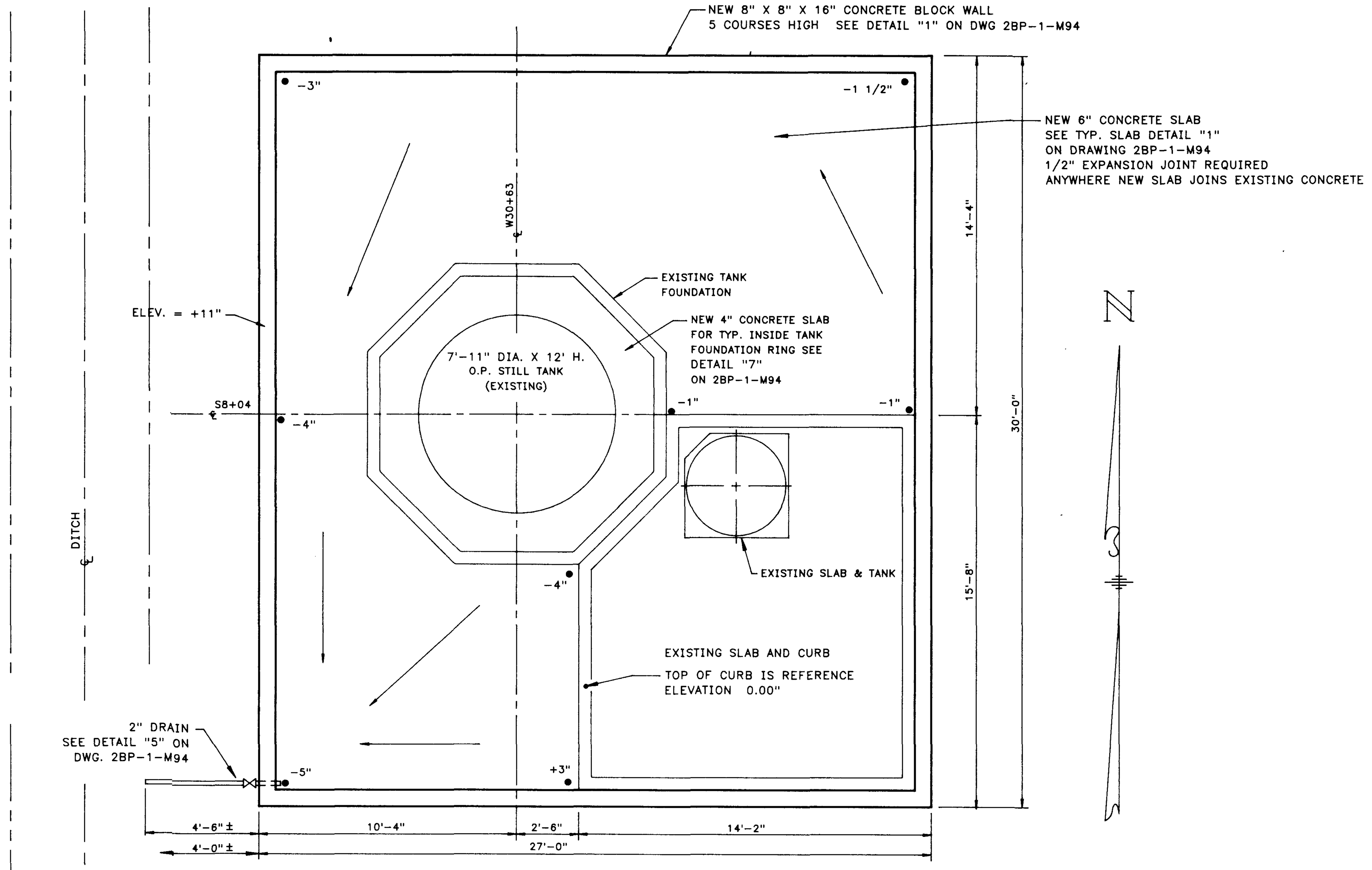

O.P. STILL CONTAINMENT PLAN

SCALE: 1/4" = 1'-0"
W.O. K-5431

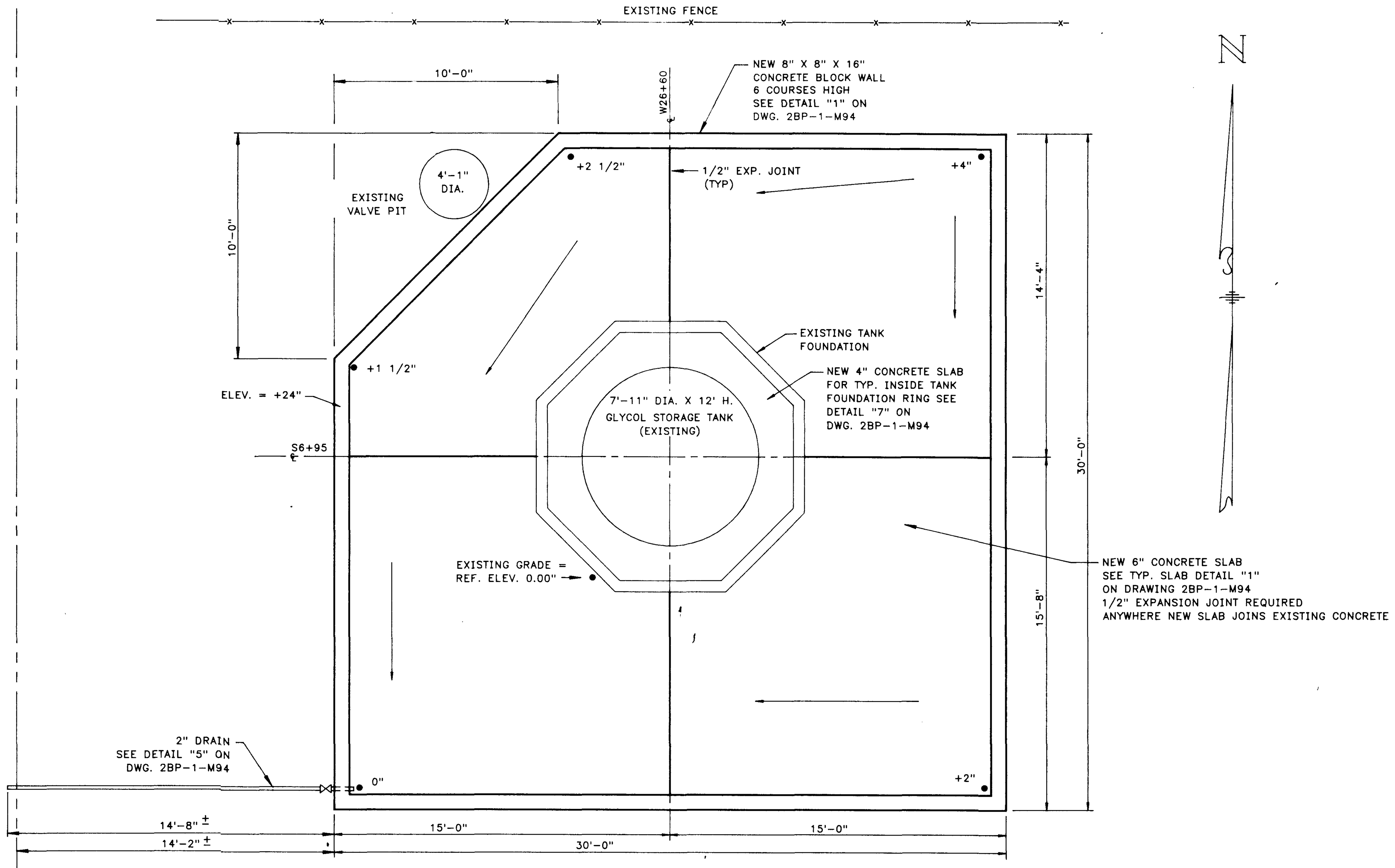

GLYCOL STORAGE CONTAINMENT PLAN

SCALE: 1/4" = 1'-0"
W.O. K-5433

NOTE:
- DENOTES SPOT ELEVATION ON SLAB.

DWG. NO.	TITLE
2BP-1-M94	CONSTRUCTION DETAILS
2BP-1-M86	LOCATION PLAN

REFERENCE DRAWINGS

NO.	DATE	BY	DESCRIPTION	W.O.	APP.

REVISIONS

PRT.	SEP.	DATE	TO	W.O.
1		10/24/89	INSPE. [illegible]	
4		11/23/89	CONTRACTS	

PRINT RECORD

ENG. RECORD		DATE
DRAFTING DESIGN	DPH	9-89
COMPUTER GRAPHICS	GH	10-3-89
CHECKED	[illegible]	10/22/89
PROJECT APPROVAL	[illegible]	10/23/89
DESIGN APPROVAL		
COMPUTER SAVE NAME	BLA487	

El Paso NATURAL GAS COMPANY

BLANCO PLANT
SECONDARY CONTAINMENT DIKES
MISCELLANEOUS TANKS

SCALE: SHOWN
W.O.: NOTED
DWG. NO. 2BP-1-M88
REV.

FM9 (Rev. 8/9/89) LEGEND

10/21/89

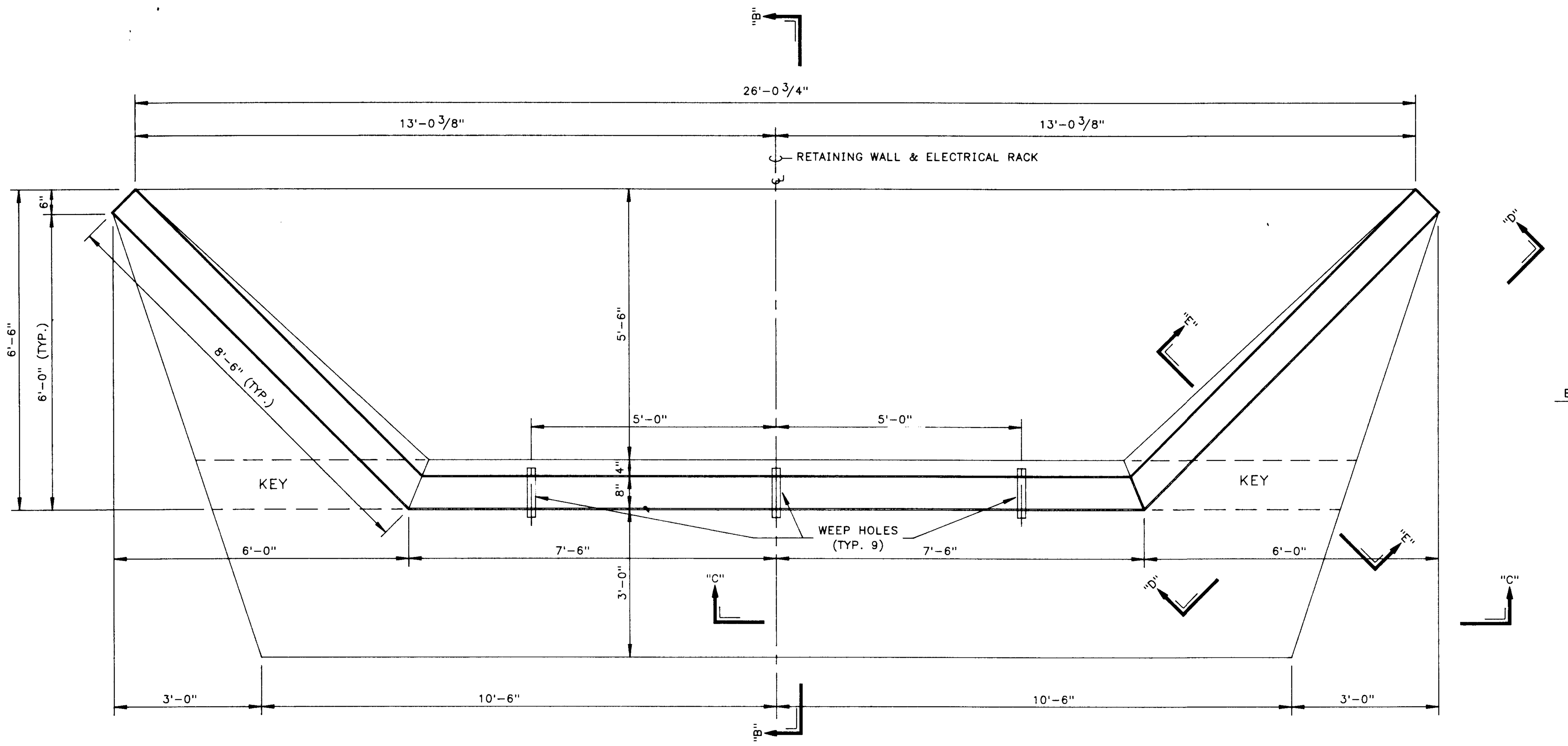

RETAINING WALL - PLAN

SCALE: 1/2"=1'-0"

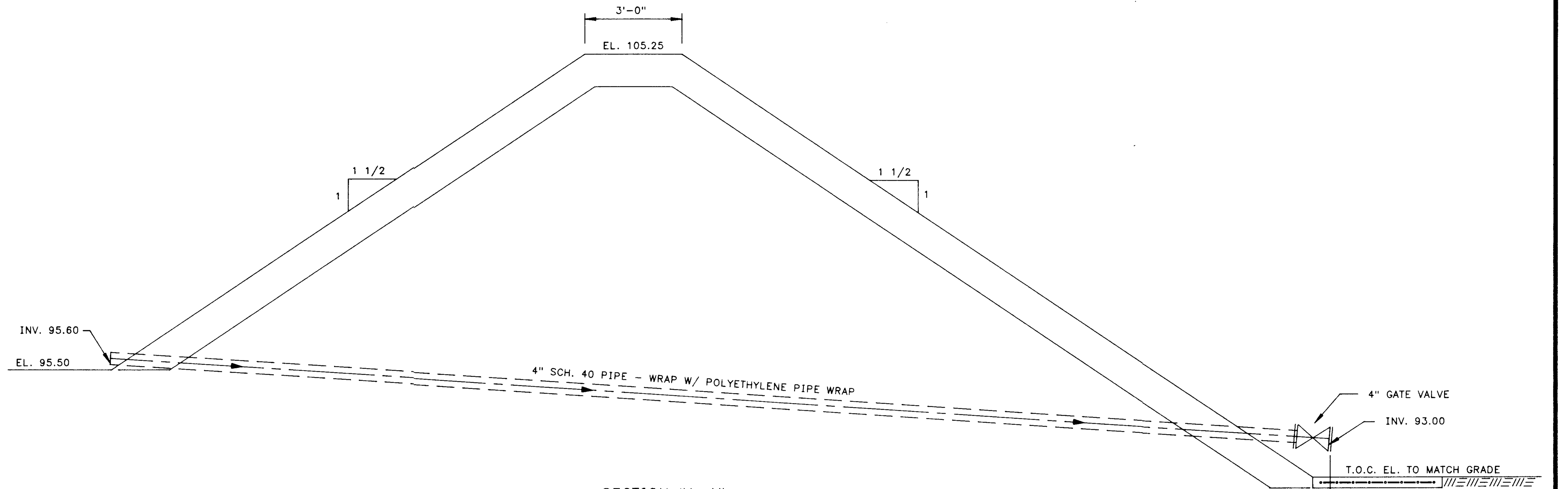

SECTION "A-A"

TYPICAL SECTION THROUGH DIKE AND DRAIN VALVE DETAIL

1/4"=1'-0"

SEE DWG. 2BP-1-M93

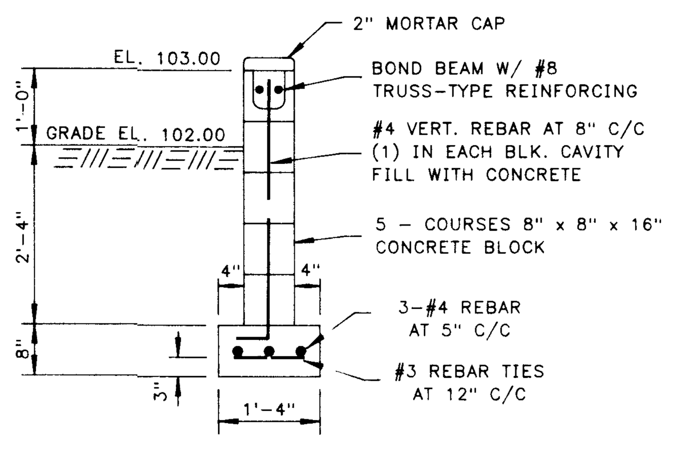

CONCRETE BLOCK WALL DETAIL

SEE DWG. 2BP-1-M93

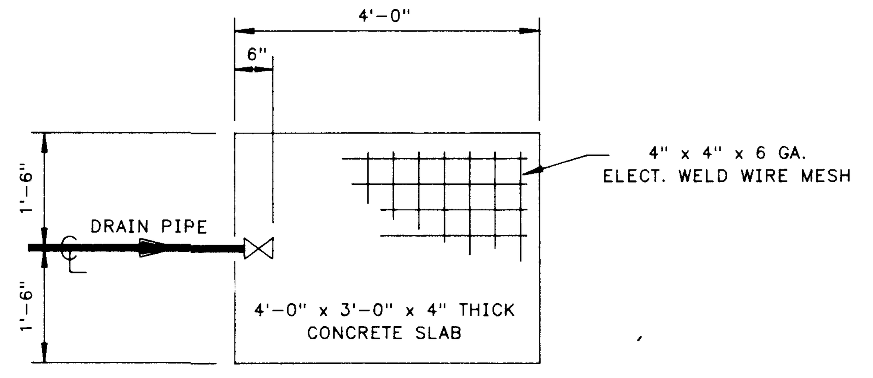

SPLASH SLAB DETAIL

1/2"=1'-0"

(2 REQUIRED)

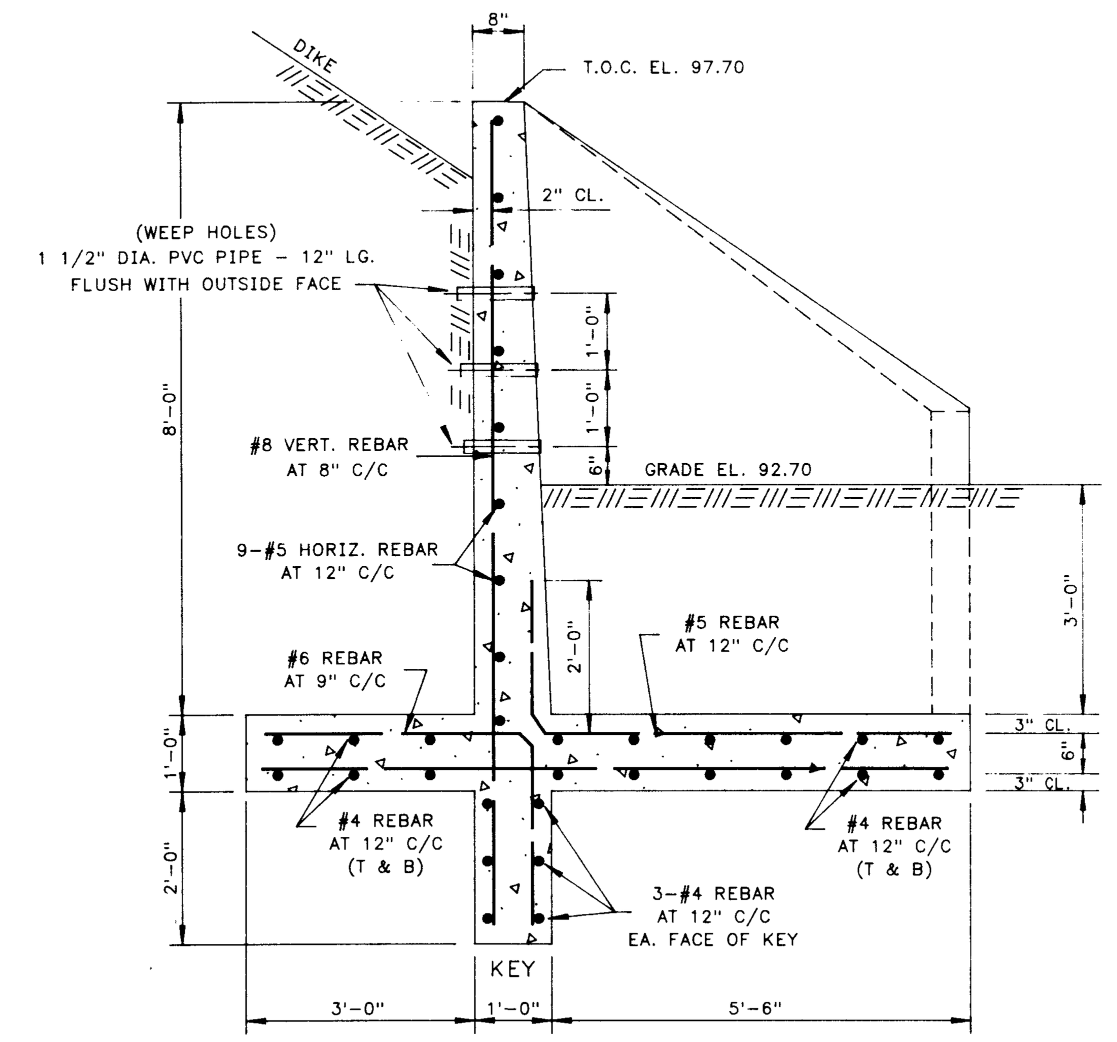

SECTION "B-B"

SCALE: 1/2"=1'-0"

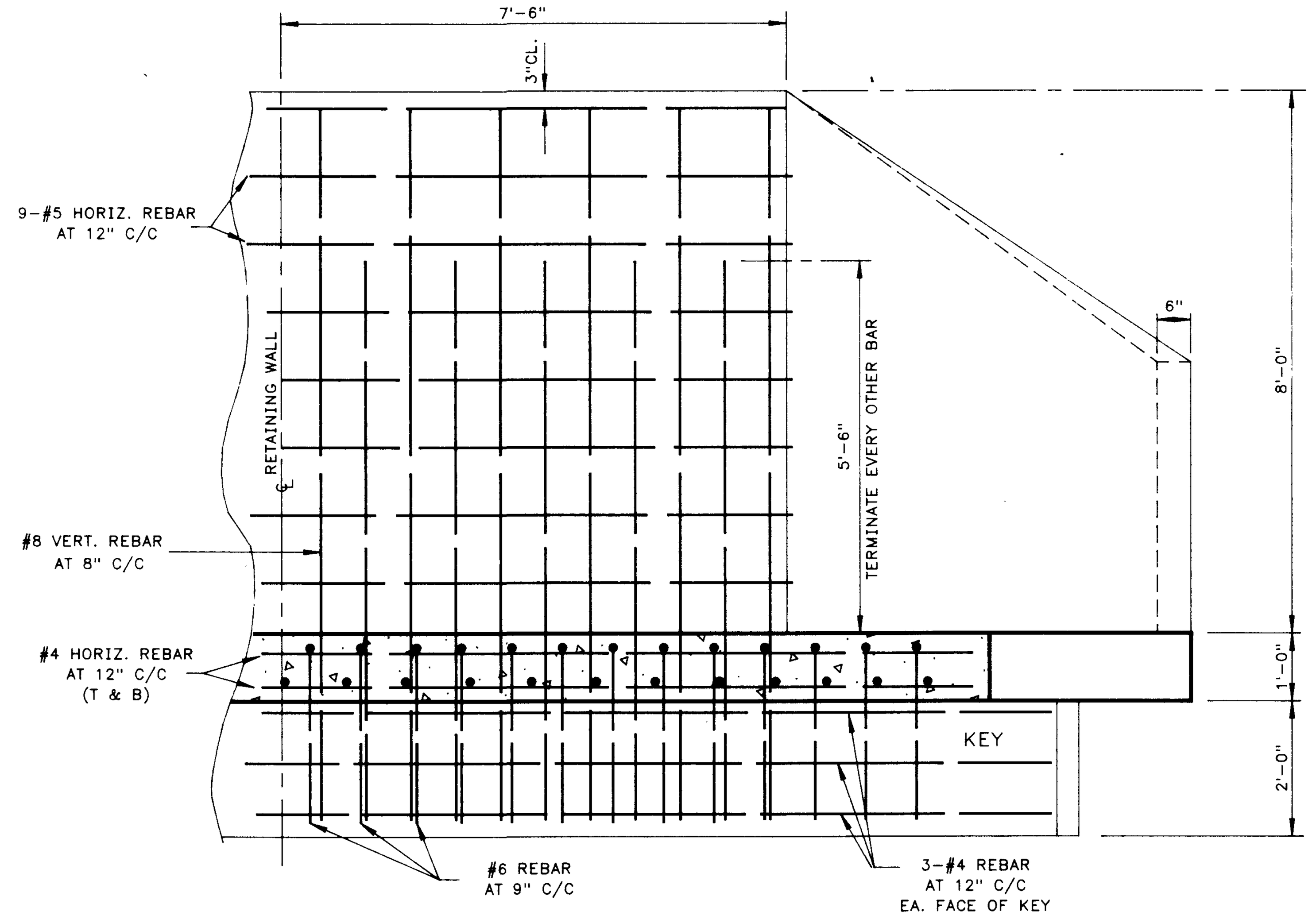

SECTION "C-C"

SCALE: 1/2"=1'-0"

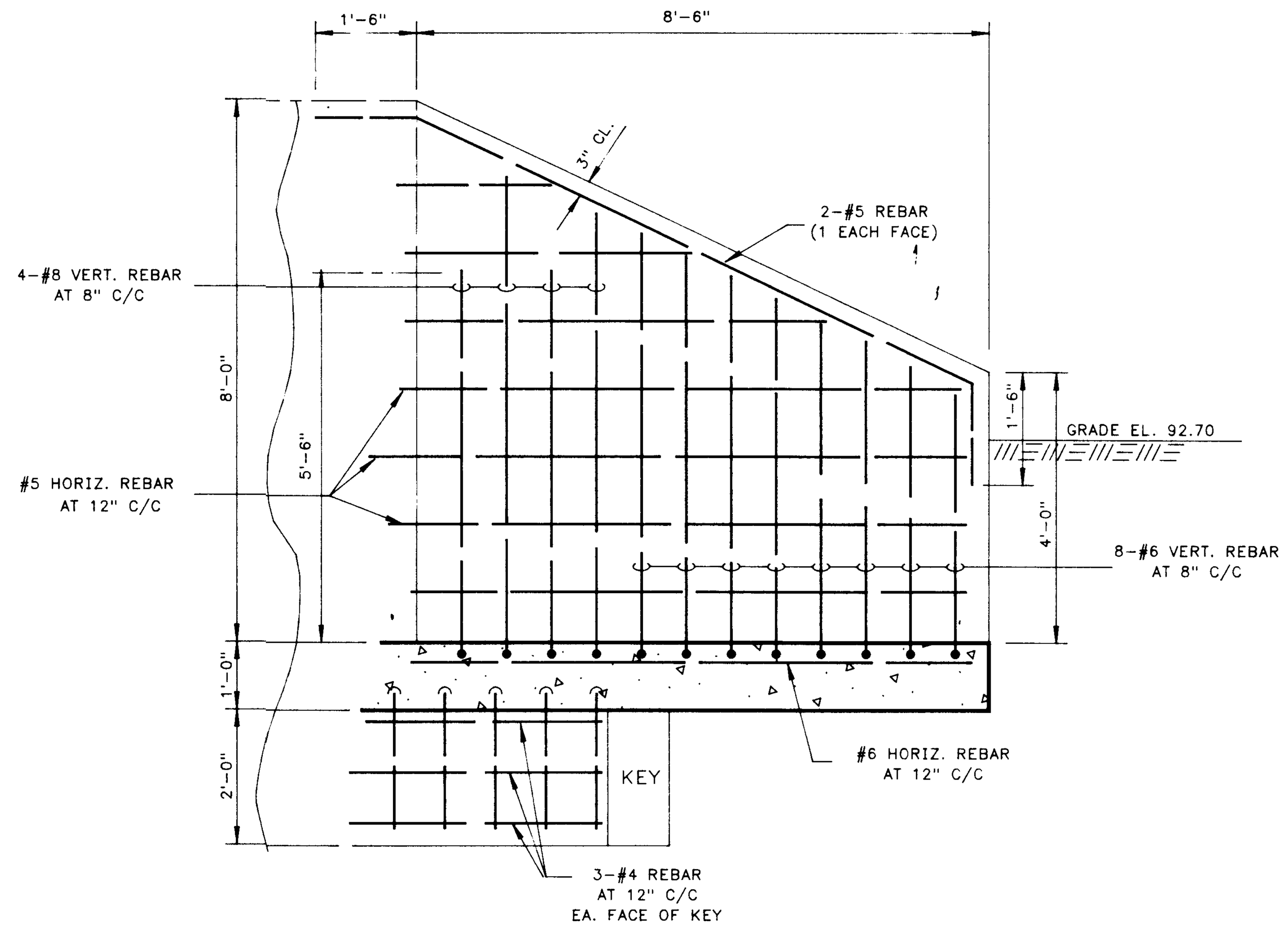

SECTION "D-D"

SCALE: 1/2"=1'-0"

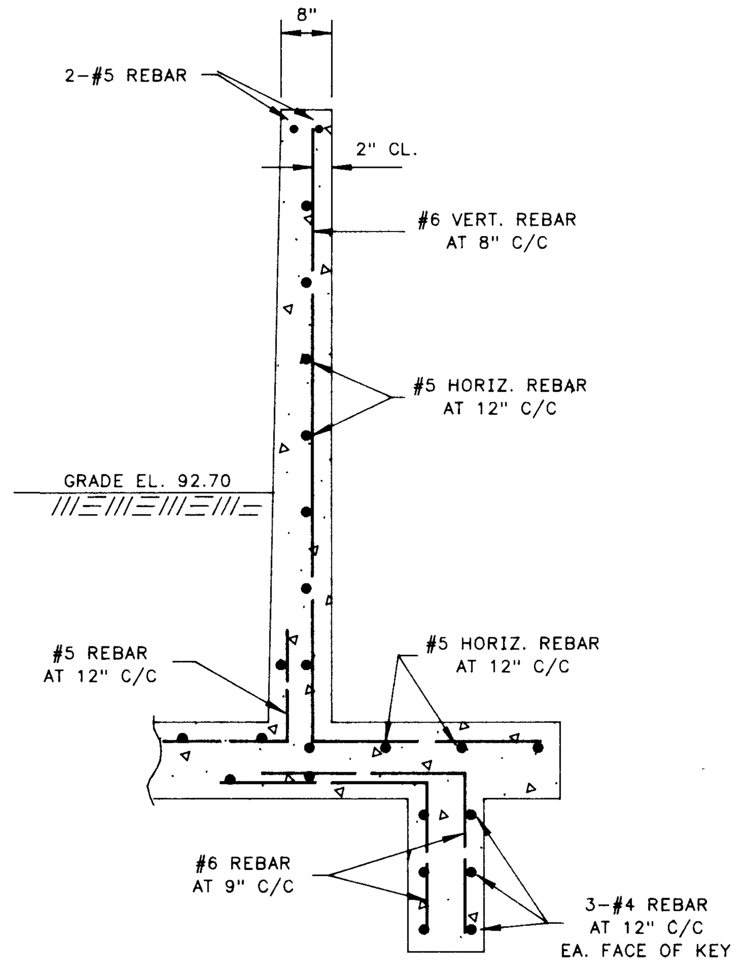

SECTION "E-E"

SCALE: 1/2"=1'-0"

DWG. NO.	TITLE
2BP-1-M93	FIELD DRIP STOR. CONTAINMENT DIKE PLAN

REFERENCE DRAWINGS

NO.	DATE	BY	DESCRIPTION	W.O.	APP.

REVISIONS

PRT.	SEP.	DATE	TO	W.O.
1		10/23/89	INSPECTION	A-8770
4		10/23/89	CONTRACTS	A-8770

PRINT RECORD

ENG. RECORD		DATE
DRAFTING DESIGN	AEG	10/17/89
COMPUTER GRAPHICS	LG	10/18/89
CHECKED	AEG	10/24/89
PROJECT APPROVAL	[illegible]	10/23/89
DESIGN APPROVAL		
COMPUTER SAVE NAME	BLA502	

El Paso
NATURAL GAS COMPANY

BLANCO GASOLINE ABSORPTION PLANT
BLANCO FIELD DRIP STORAGE
RETAINING WALL
PLAN, ELEVATIONS & DETAILS

SCALE: NOTED
W.O.: A-8770
DWG. NO. 2BP-1-M100
REV.

LEGEND

FM9 (Rev. 8/9/89)

10/21/89

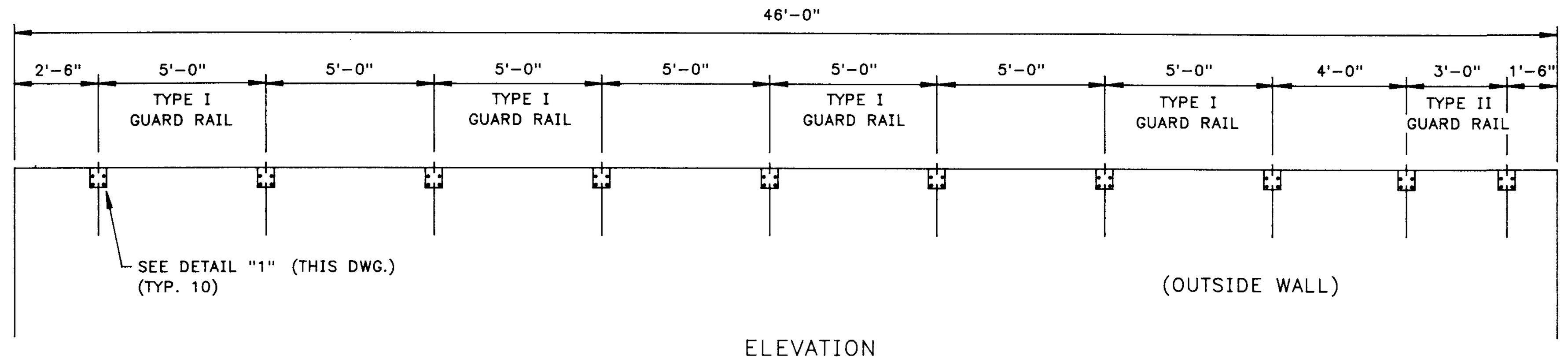

ELEVATION
GUARD RAILS – NORTH DIKE
SCALE: 1/4"=1'-0"

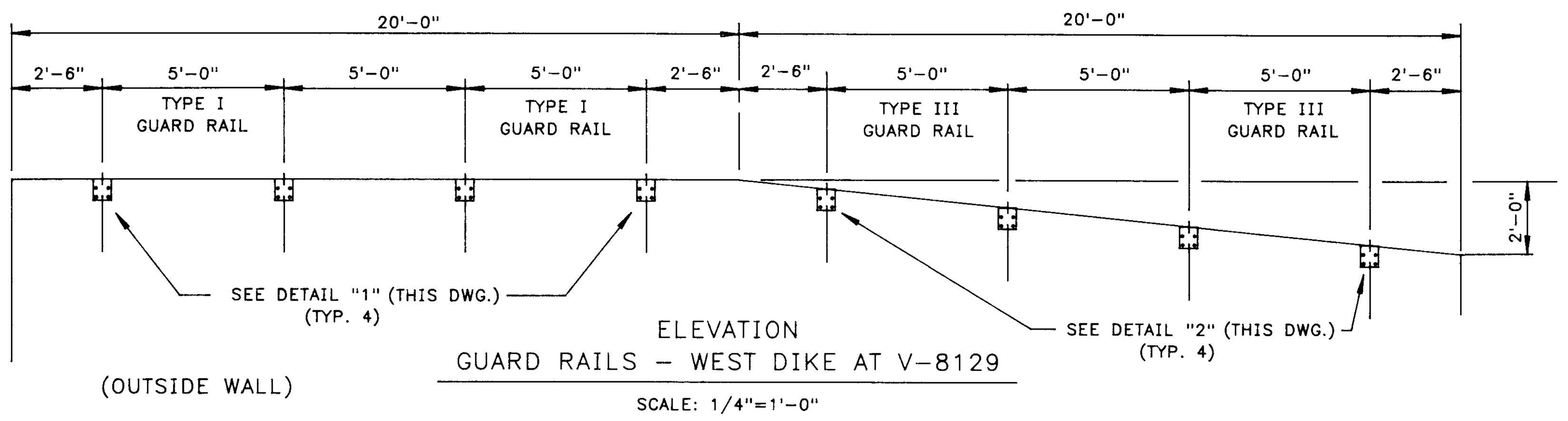

ELEVATION
GUARD RAILS – WEST DIKE AT V-8129
SCALE: 1/4"=1'-0"

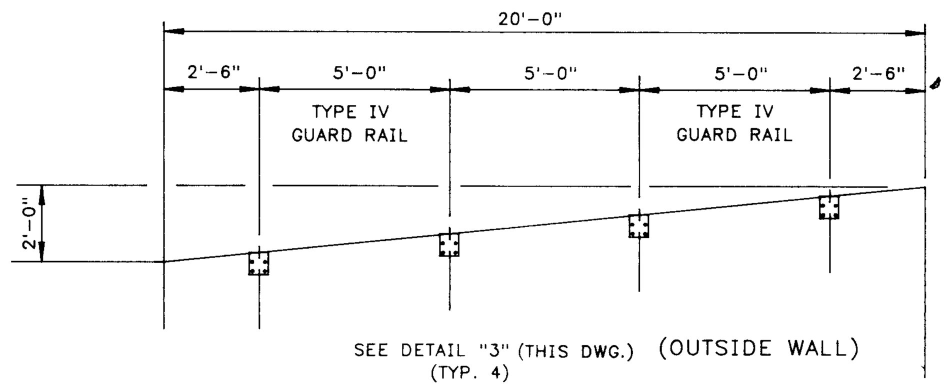

ELEVATION
GUARD RAILS – EAST DIKE AT V-8129
SCALE: 1/4"=1'-0"

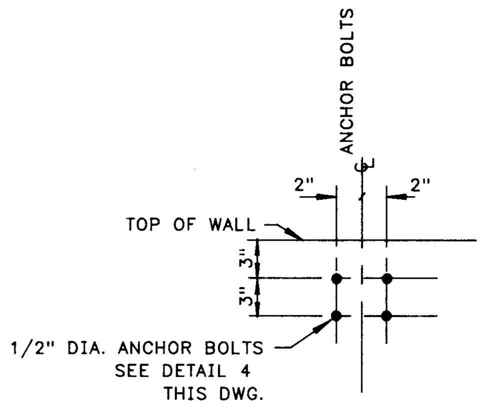

DETAIL "1"
FOR LEVEL WALLS
THIS DWG.
SCALE: 1"=1'-0"

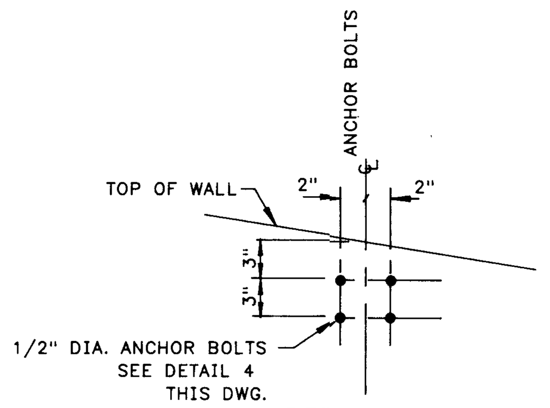

DETAIL "2"
FOR R.H. SLOPING WALLS
THIS DWG.
SCALE: 1"=1'-0"

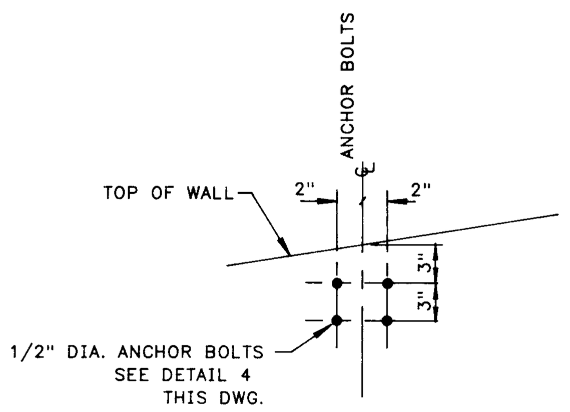

DETAIL "3"
FOR L.H. SLOPING WALLS
THIS DWG.
SCALE: 1"=1'-0"

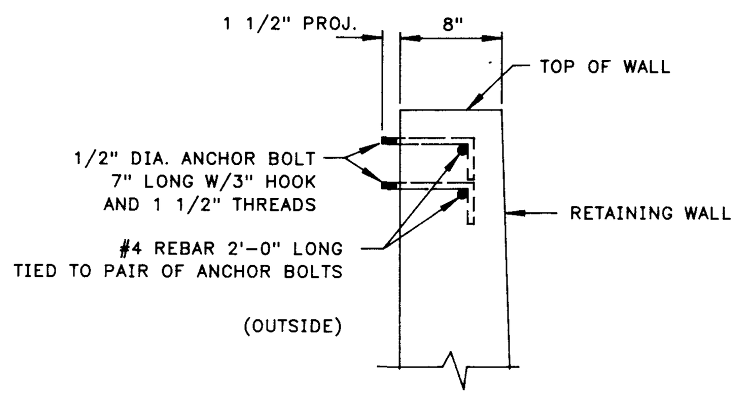

DETAIL "4"
THIS DWG.
SCALE: 1"=1'-0"

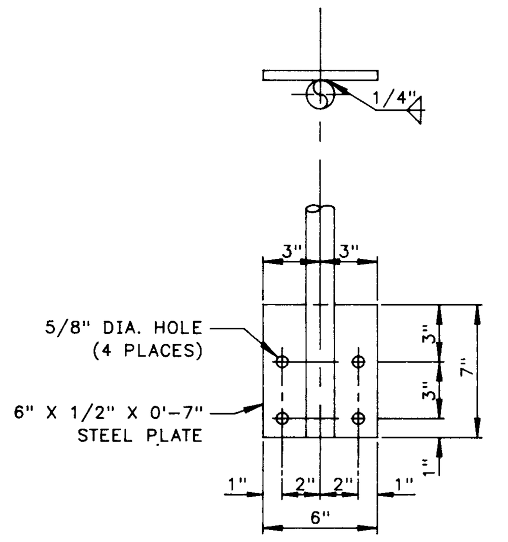

BOLTING PLATE DETAIL
THIS DWG.
SCALE: 1 1/2"=1'-0"

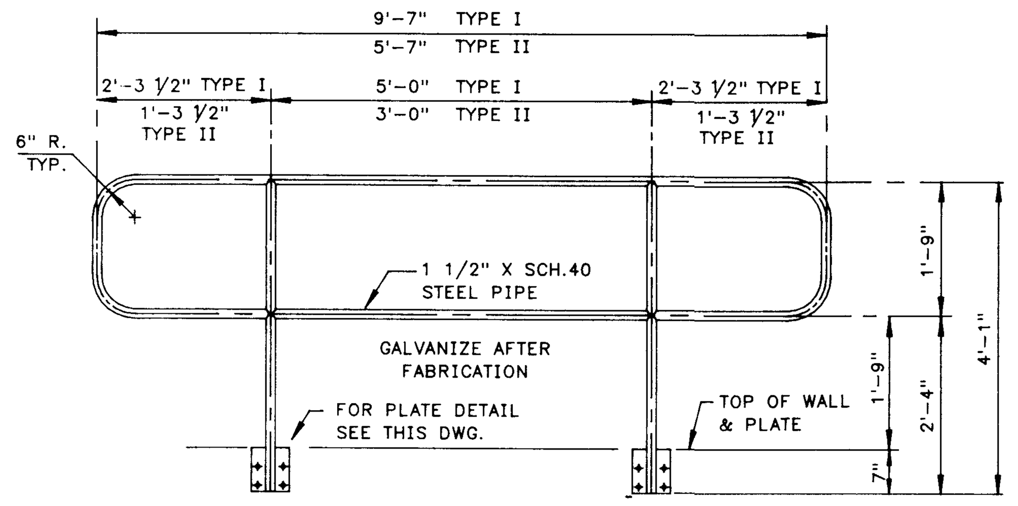

DETAIL "7"
STANDARD GUARD RAIL
TYPE I AND TYPE II
THIS DWG.
SCALE: 1"=1'-0"

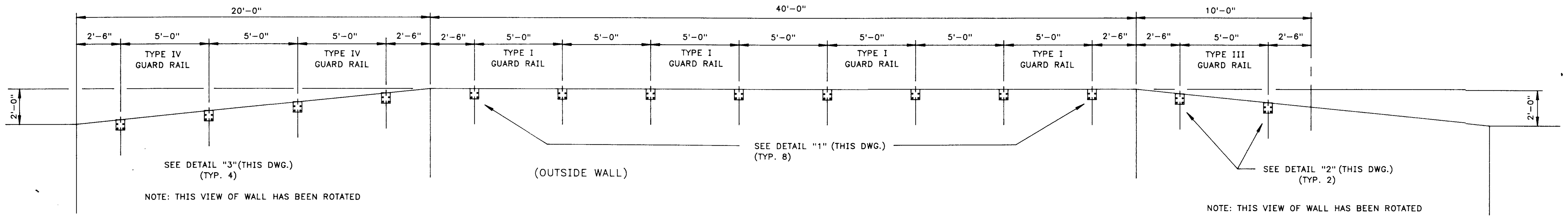

ELEVATION
GUARD RAILS – WEST DIKE – SOUTH
SCALE: 1/4"=1'-0"

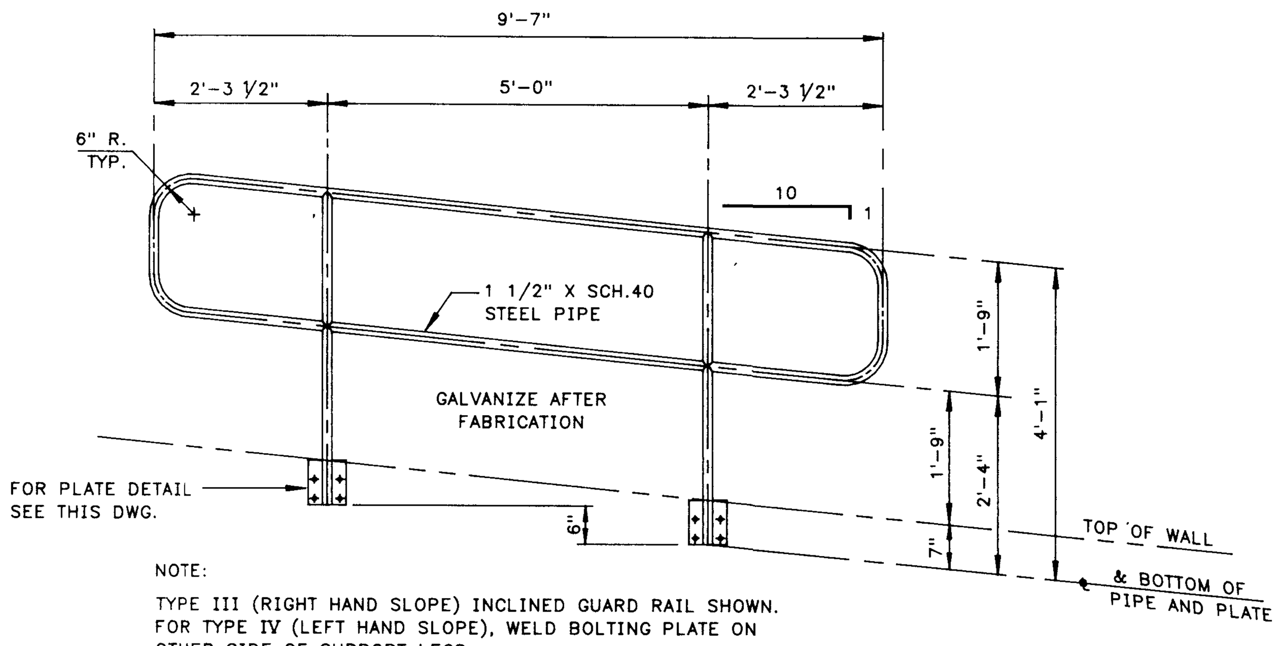

NOTE:
TYPE III (RIGHT HAND SLOPE) INCLINED GUARD RAIL SHOWN. FOR TYPE IV (LEFT HAND SLOPE), WELD BOLTING PLATE ON OTHER SIDE OF SUPPORT LEGS.

DETAIL "8"
INCLINED GUARD RAIL
TYPE III AND TYPE IV
THIS DWG.
SCALE: 1"=1'-0"

FM9 (Rev. 8/9/89) LEGEND

DWG. NO.	TITLE
2BP-1-M92	BOTTOMS STORAGE AREA PLAN

REFERENCE DRAWINGS

NO.	DATE	BY	DESCRIPTION	W.O.	APP.

REVISIONS

PRT.	SEP.	DATE	TO	W.O.
/		10-23-89	[illegible]	K-5431
4		10-23-89	CONTRACTS	K-5431

PRINT RECORD

ENG. RECORD		DATE
DRAFTING DESIGN	AEG	10/18/89
COMPUTER GRAPHICS	FB EG	10/19/89
CHECKED	AEG	10/22/89
PROJECT APPROVAL	[illegible]	10/23/89
DESIGN APPROVAL		
COMPUTER SAVE NAME	BLA499	

El Paso
NATURAL GAS COMPANY

BLANCO GASOLINE ABSORPTION PLANT
SECONDARY CONTAINMENT DIKES
BOTTOMS STORAGE AREA
GUARD RAILS, ELEVATIONS AND DETAILS

SCALE: NOTED
W.O.: K-5431
DWG. NO. 2BP-1-M98
RDV.

10/21/89

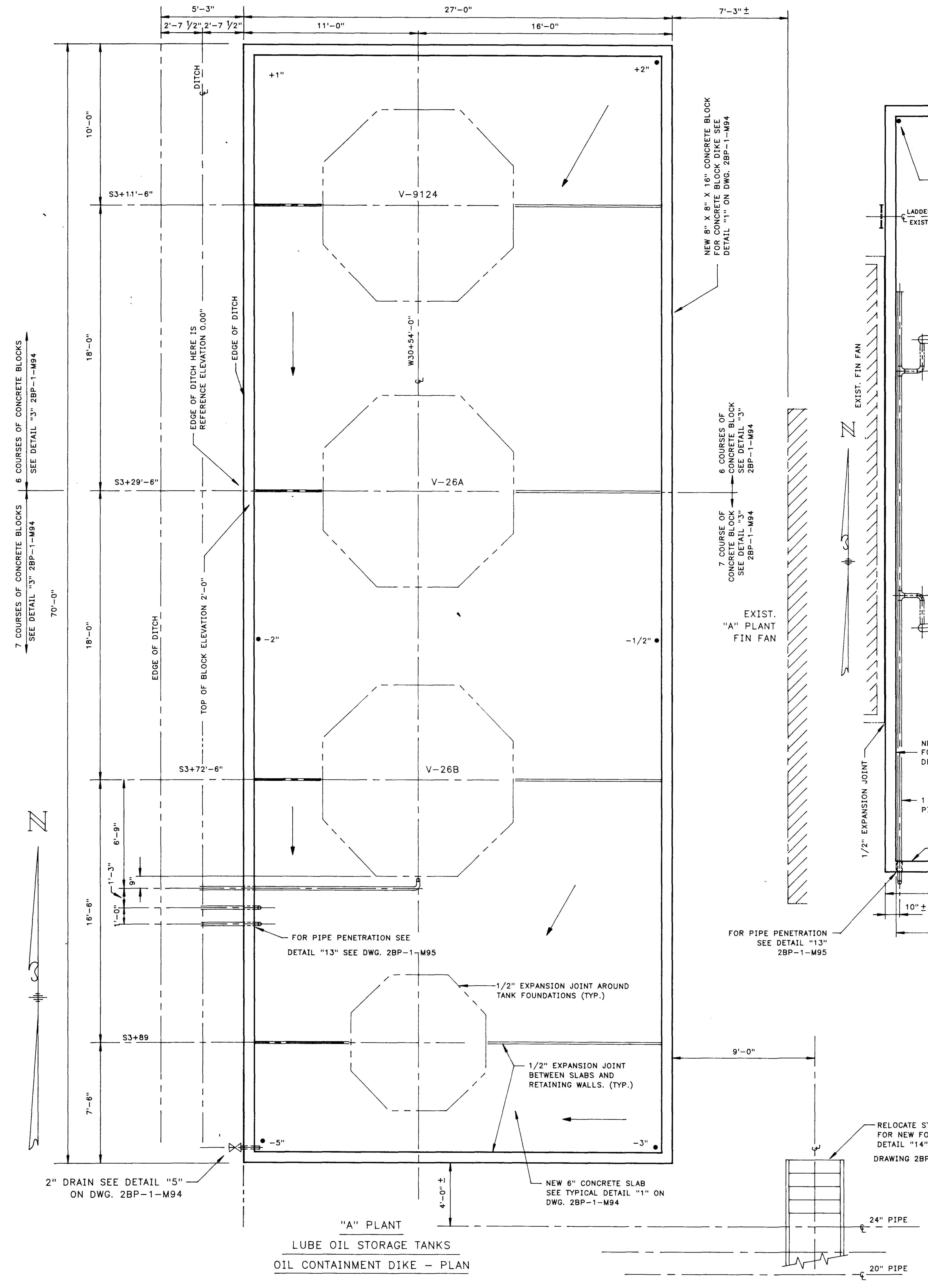

"A" PLANT
LUBE OIL STORAGE TANKS
OIL CONTAINMENT DIKE - PLAN

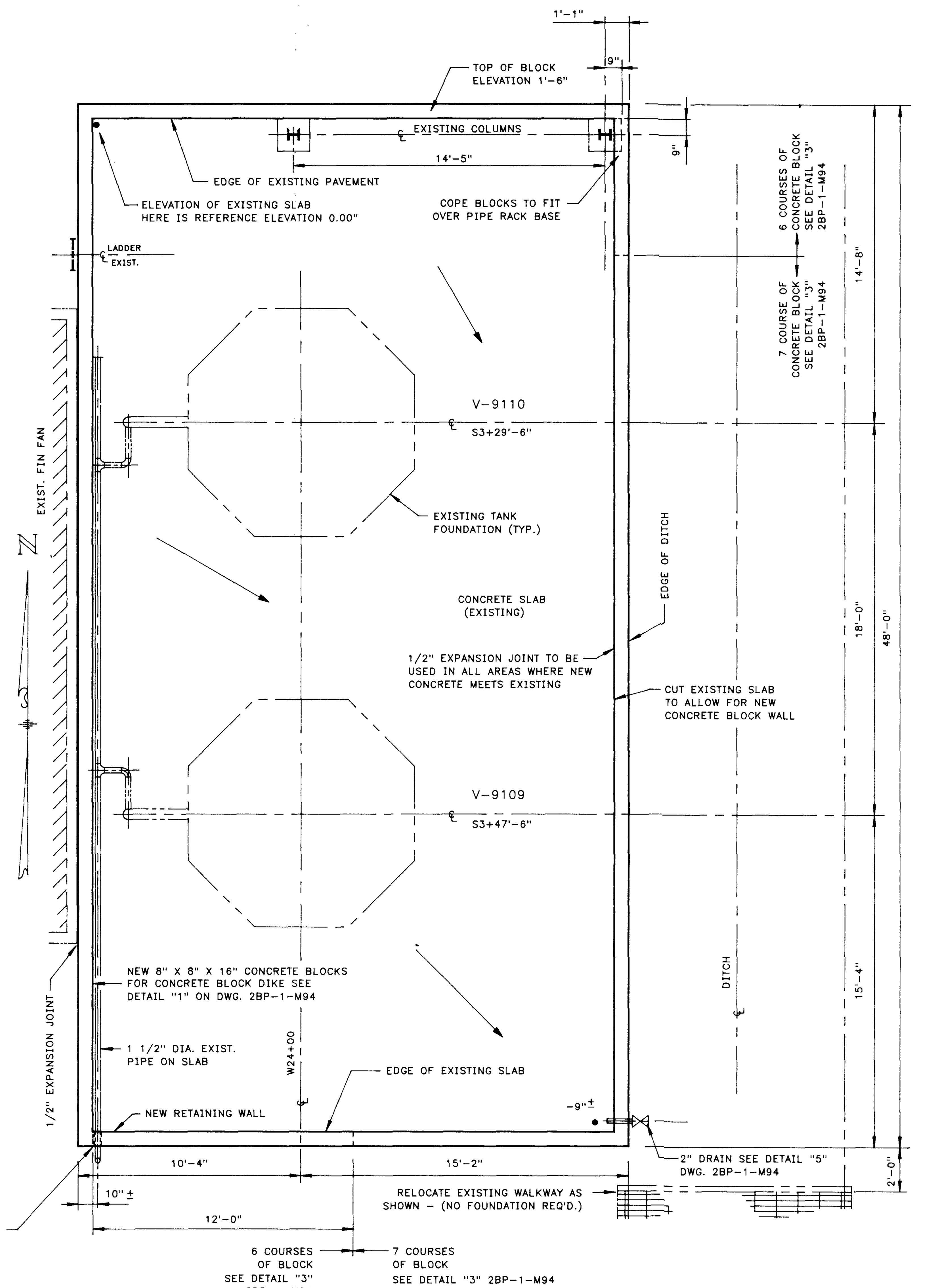

"B" PLANT LUBE OIL TANKS
OIL CONTAINMENT DIKE - PLAN

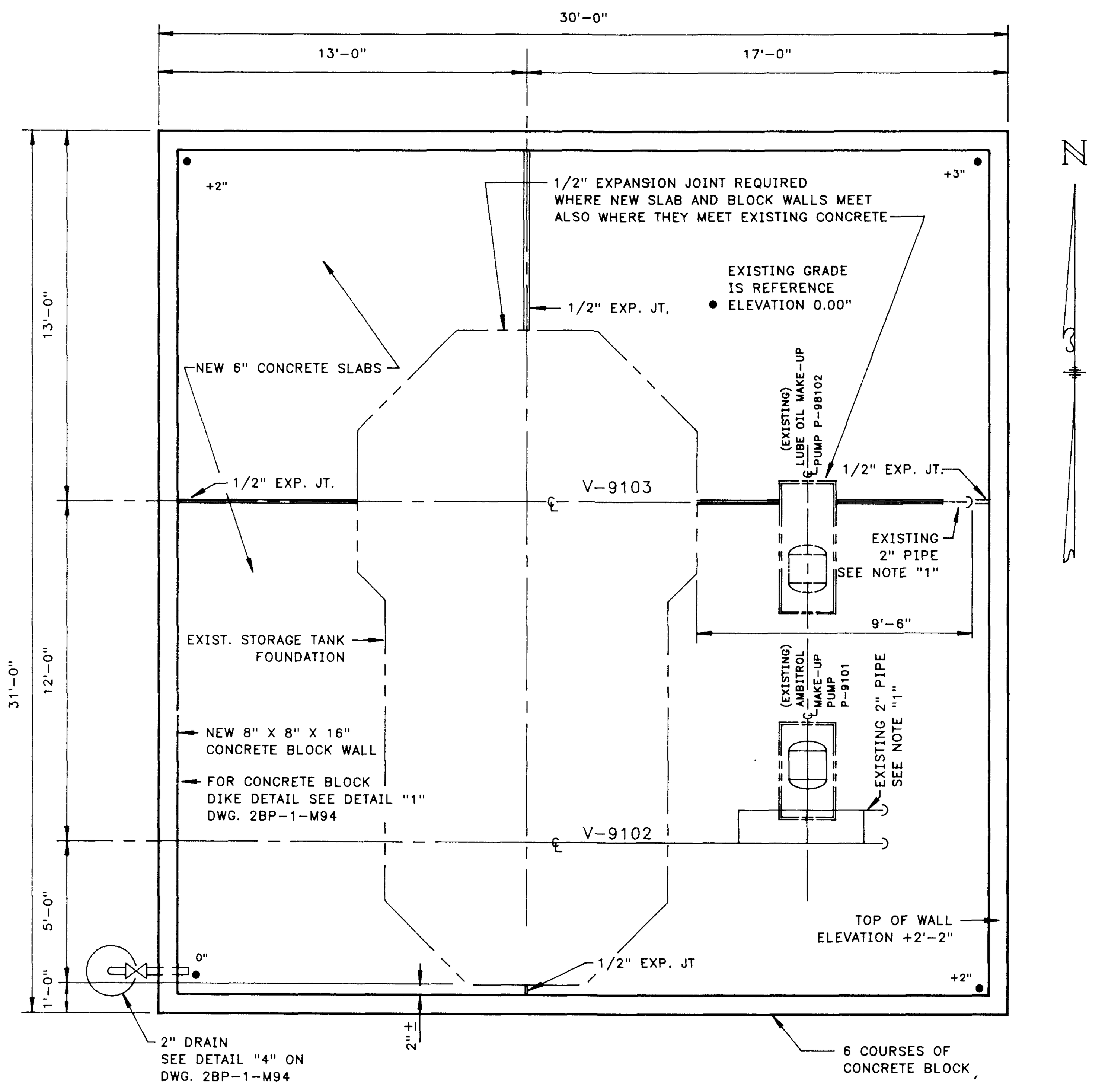

"C" PLANT
LUBE OIL AND AMBITROL STORAGE TANKS
OIL CONTAINMENT DIKE - PLAN

NOTES:

1. SEAL ALL PIPE THAT PENETRATES NEW CONCRETE SLABS.
2. ● DENOTES SPOT ELEVATION ON SLAB.

DWG. NO.	TITLE
2BP-1-M96	FOUNDATION DETAILS
2BP-1-M94	CONSTRUCTION DETAILS
2BP-1-M86	LOCATION PLAN

REFERENCE DRAWINGS

NO.	DATE	BY	DESCRIPTION	W.O.	APP.

REVISIONS

PRT.	SEP.	DATE	TO	W.O.
1		10-23-89	INSPECTION	L-3973
4		10-23-89	CONTRACTS	L-3973

PRINT RECORD

ENG. RECORD		DATE
DRAFTING DESIGN	DPH	9/89
COMPUTER GRAPHICS	JT	10/6/89
CHECKED	REZ	10/22/89
PROJECT APPROVAL	WJG	10/23/89
DESIGN APPROVAL		
COMPUTER SAVE NAME	BLA486	

El Paso
NATURAL GAS COMPANY

BLANCO COMPRESSOR PLANT
LUBE OIL TANKS
SECONDARY CONTAINMENT DIKES

SCALE: 1/4"=1'-0"
W.O.: L-3973
DWG. NO. 2BP-1-M87

EM9 (Rev. 8/9/89)
LEGEND

10/21/89

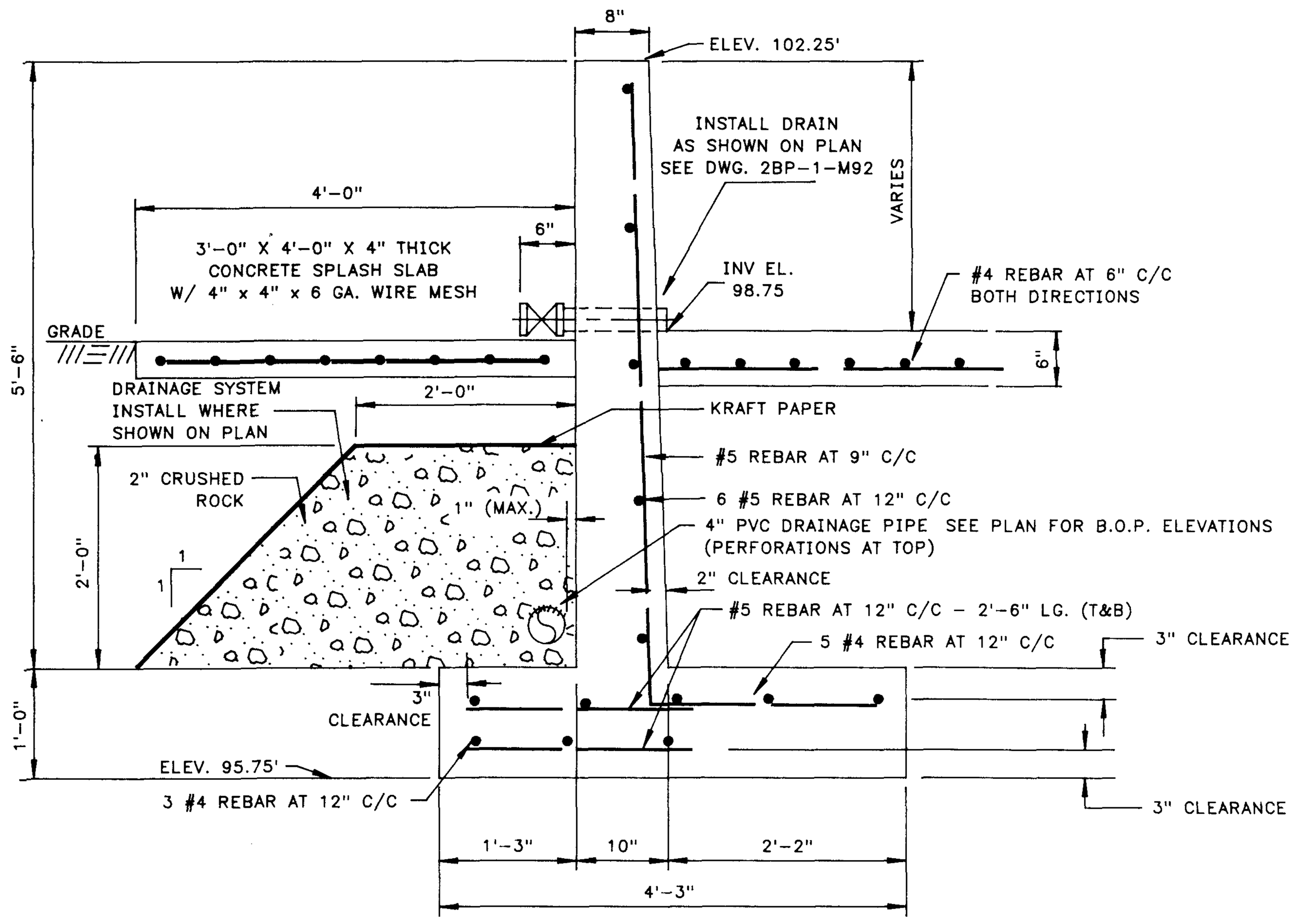

DETAIL "1"
TYPE "A" WALL
SCALE: 3/4"=1'-0"

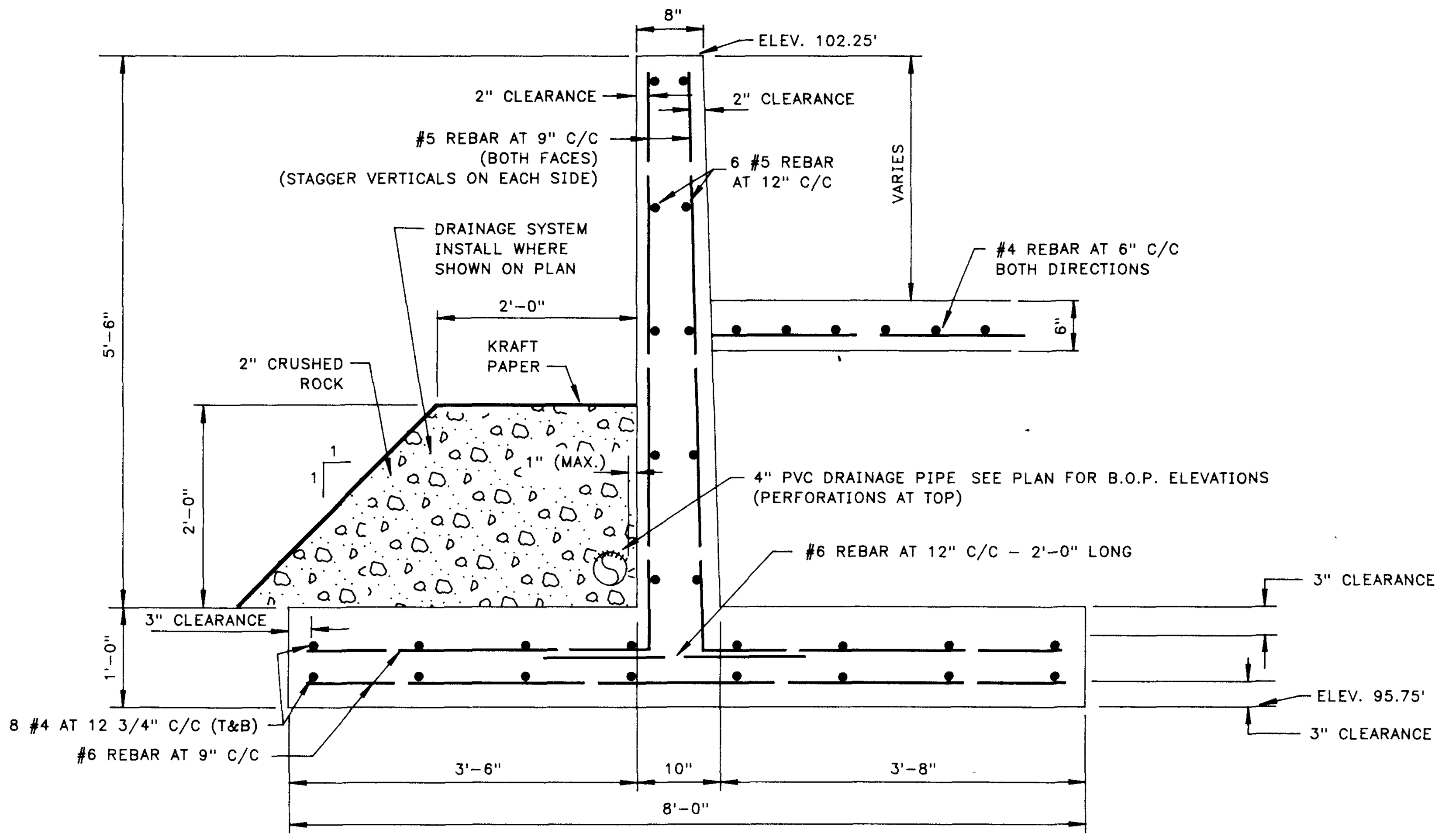

DETAIL "2"
TYPE "B" WALL
SCALE: 3/4"=1'-0"

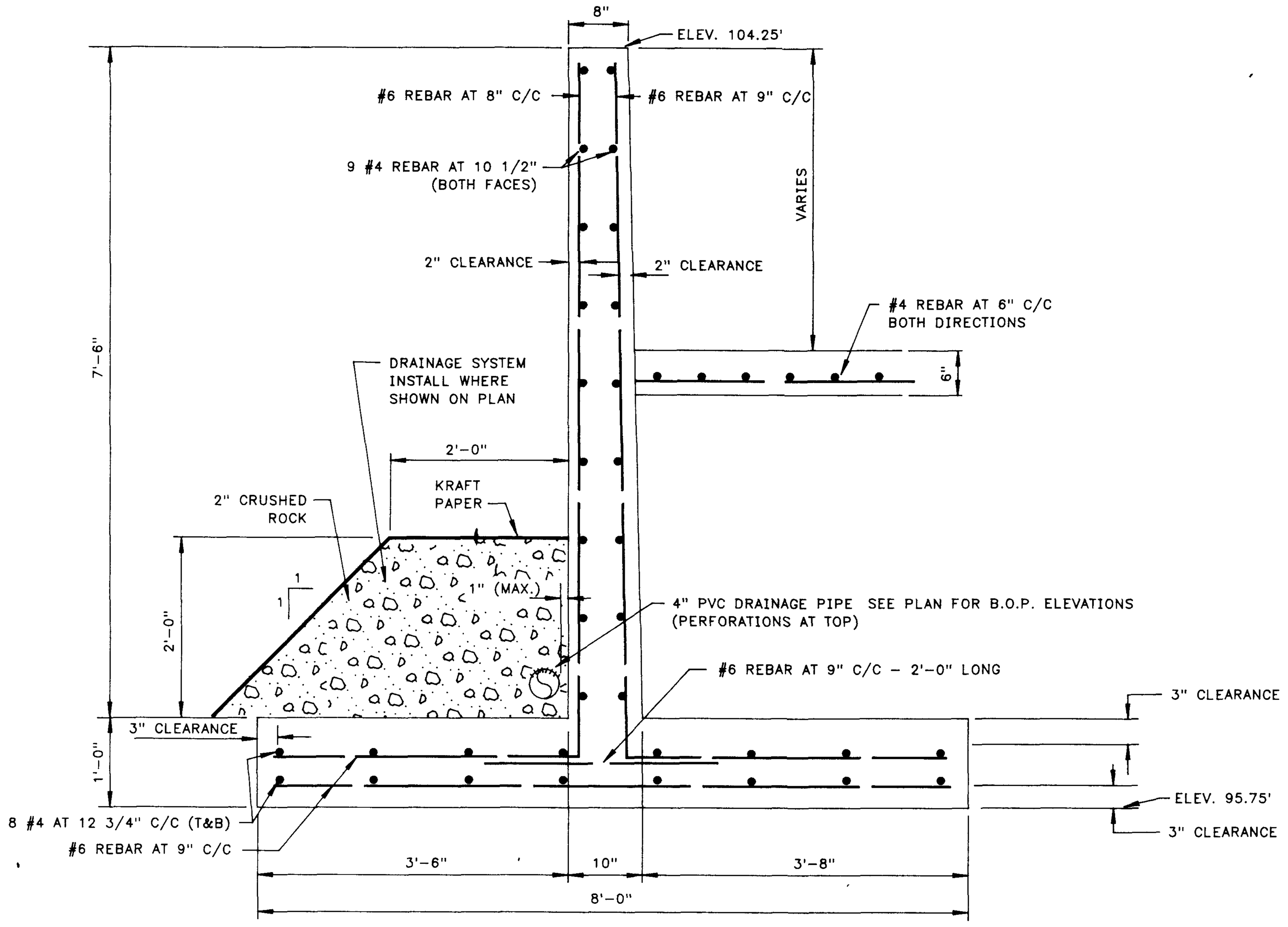

DETAIL "3"
TYPE "C" WALL
SCALE: 3/4"=1'-0"

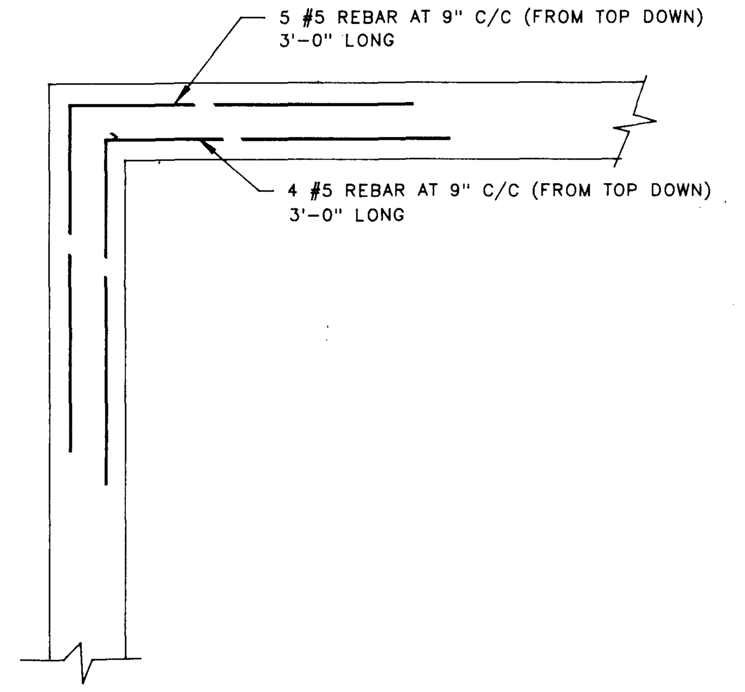

DETAIL "4"
ADDITIONAL REINFORCEMENT
AT 11 CORNERS
SCALE: 3/4"=1'-0"

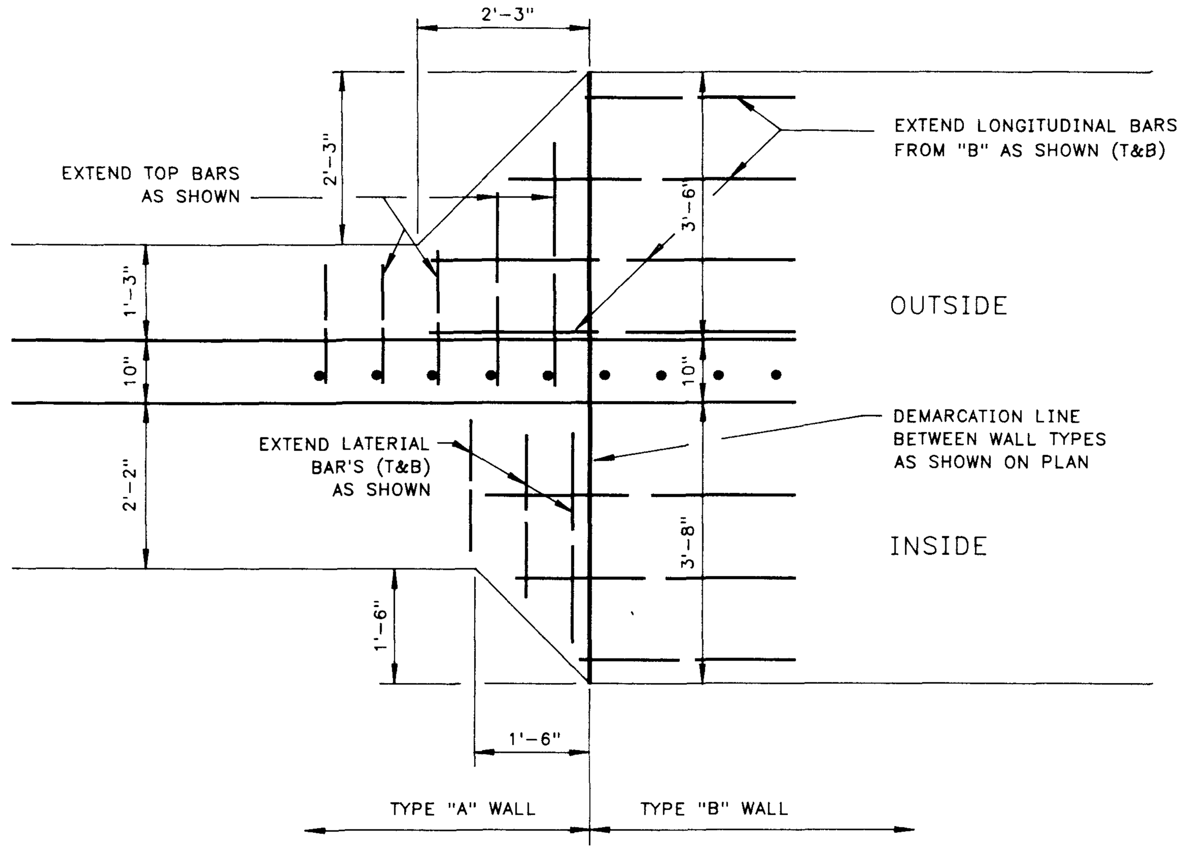

DETAIL 5
PLAN ON TOP OF FOOTING
FOOTING TRANSITION FROM "A" WALL TO "B" WALL
(TYPICAL 3 PLACES)
SCALE: 1/2"=1'-0"

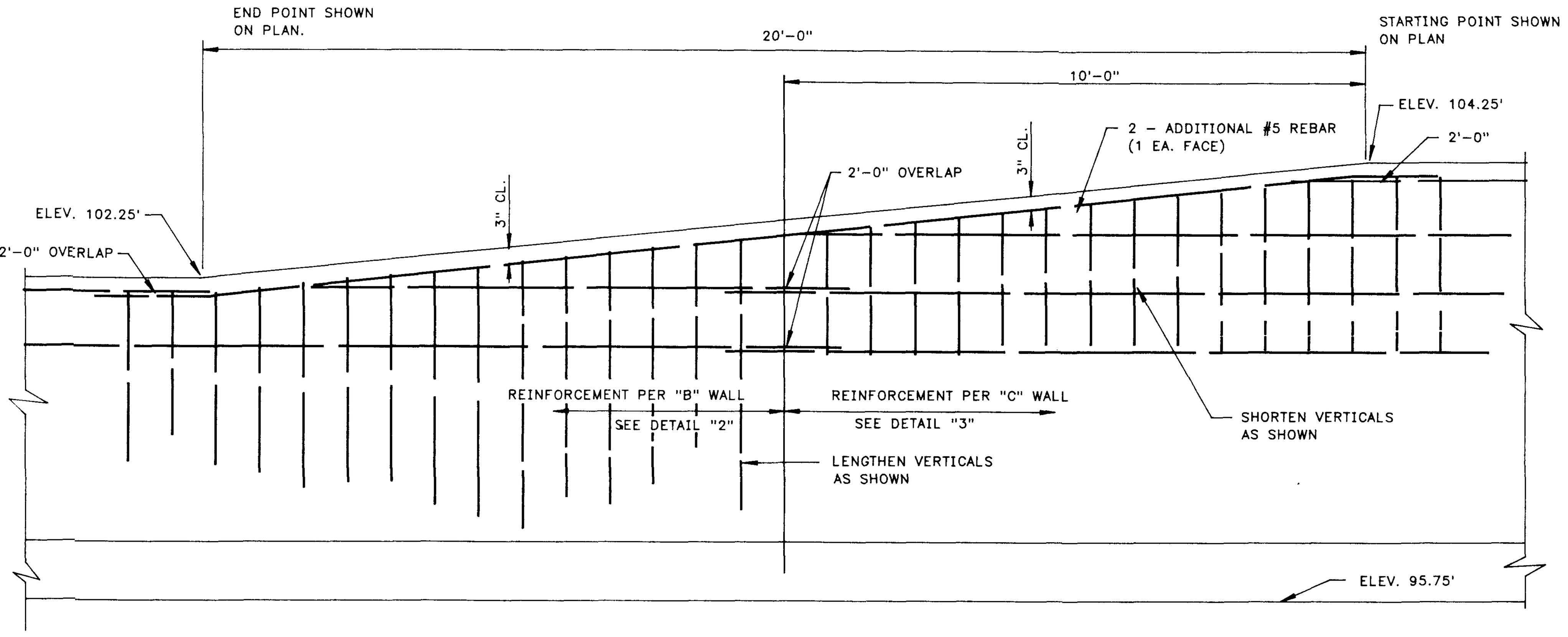

DETAIL 6
TRANSITION WALL
(TYPICAL 4 PLACES)
SCALE: 1/2"=1'-0"

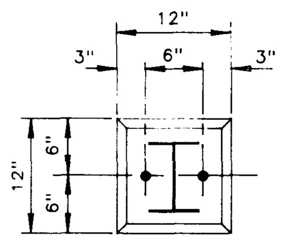

PLAN
ORIENTATION IS
DETERMINED BY
EXISTING SUPPORT.

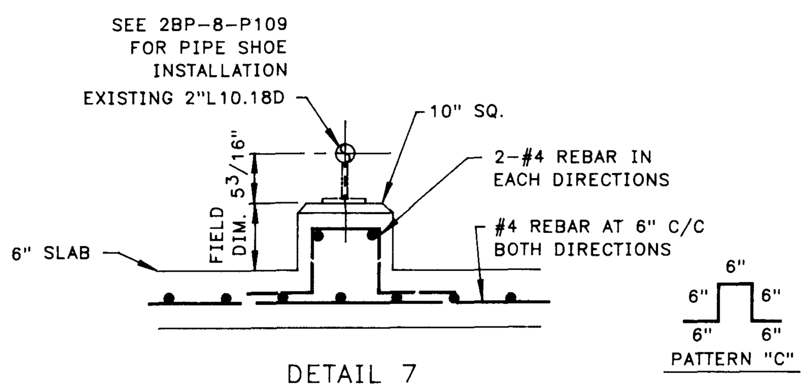

DETAIL 7
PIPE SUPPORT AT GRADE
(2 PLACES)
SCALE" 3/4"=1'-0"

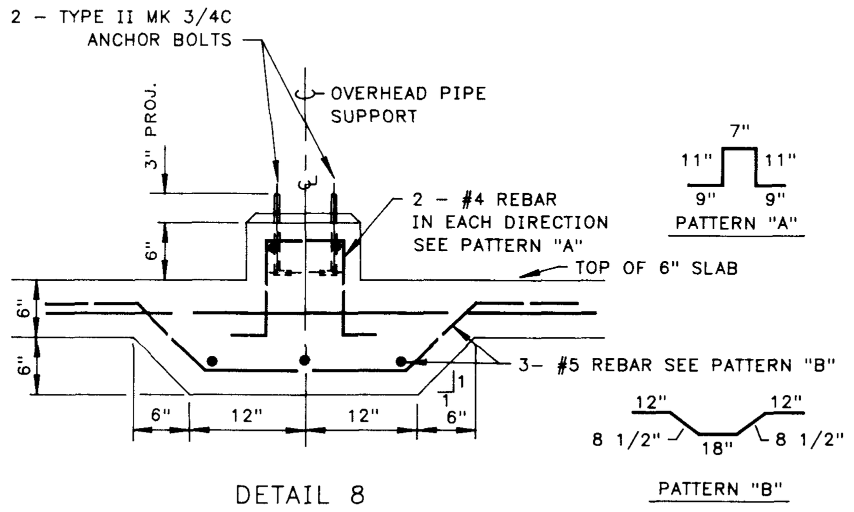

DETAIL 8
SECTION THROUGH BOTH AXES
BASE FOR OVERHEAD
PIPE SUPPORT
SCALE: 3/4"=1'-0"

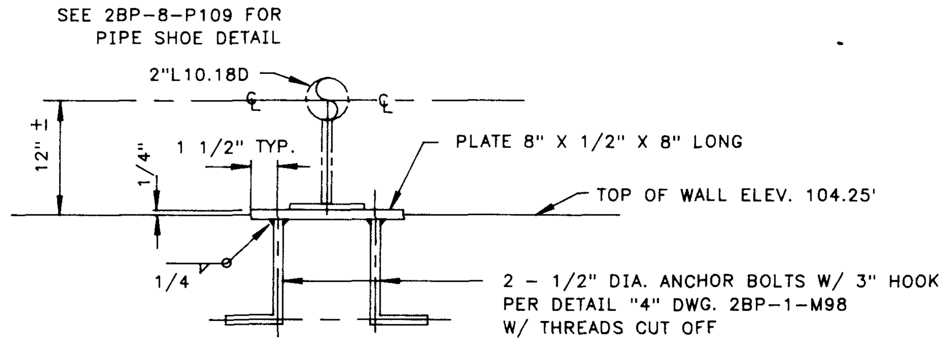

DETAIL 9
ANCHOR AT WALL
(1 - REQUIRED)
SCALE: 1 1/2"=1'-0"

DWG. NO.	TITLE
STD-1-M2	STANDARD ANCHOR BOLTS
2BP-1-M92	BOTTOMS STORAGE AREA PLAN

REFERENCE DRAWINGS

NO.	DATE	BY	DESCRIPTION	W.O.	APP.

REVISIONS

PRT.	SEP.	DATE	TO	W.O.
1		10.23.89	INSPECTION	K-5431
4		10.23.89	CONTRACTS	K-5431

PRINT RECORD

ENG. RECORD		DATE
DRAFTING DESIGN	AEG	9/15/89
COMPUTER GRAPHICS	FB	10/16/89
CHECKED	AEG	10/22/89
PROJECT APPROVAL	GSS	10/23/89
DESIGN APPROVAL		
COMPUTER SAVE NAME	BLA504	

El Paso
NATURAL GAS COMPANY

BLANCO GASOLINE ABSORPTION PLANT
SECONDARY CONTAINMENT DIKES
BOTTOMS STORAGE AREA DETAILS

SCALE: NOTED
W.O.: K-5431
DWG. NO. 2BP-1-M97
REV.

FM9 (Rev. 8/9/89)
LEGEND

10/21/89

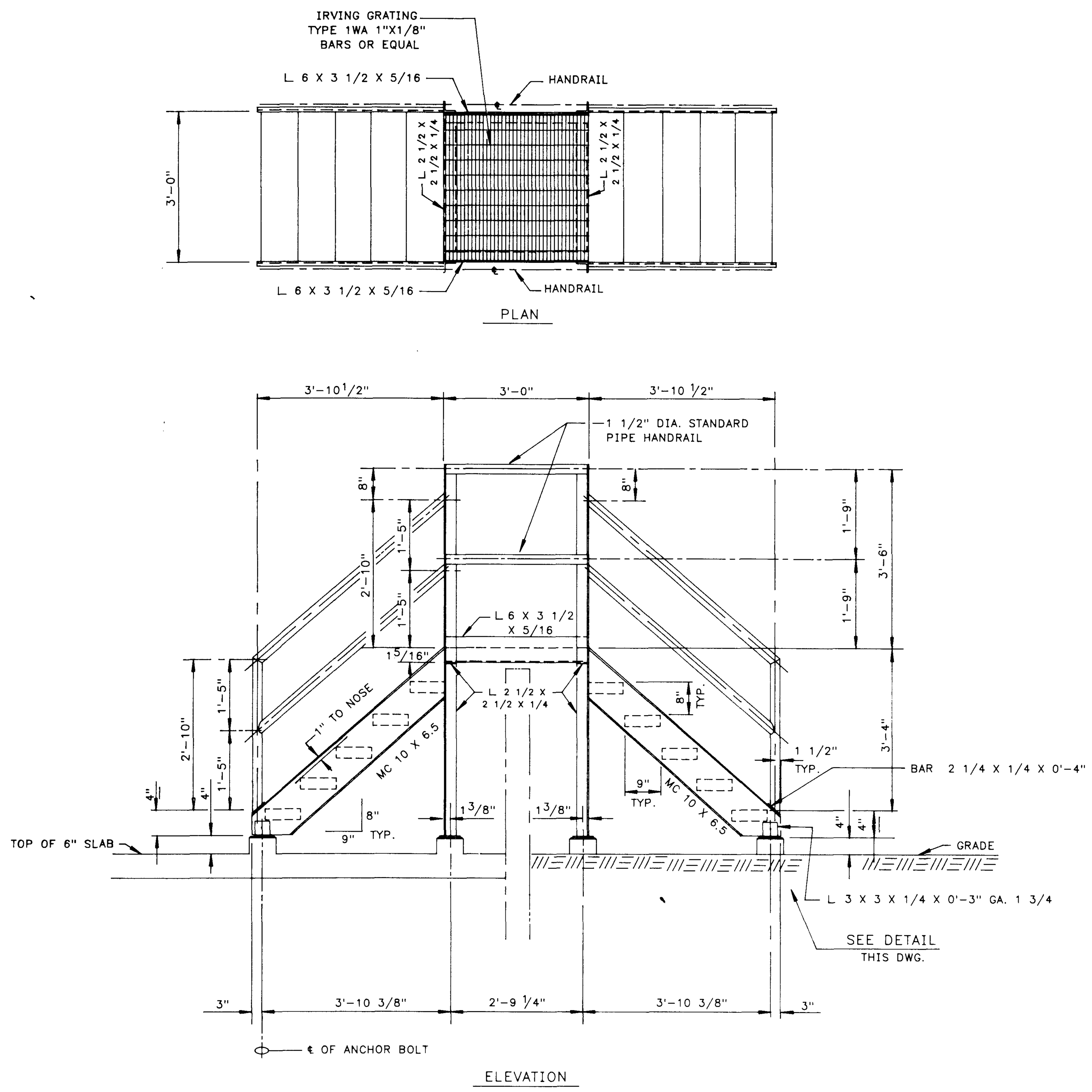

STILE
TYPE I
(2- REQUIRED)
SCALE: 1/2" = 1'-0"
DWG. 2BP-1-M92

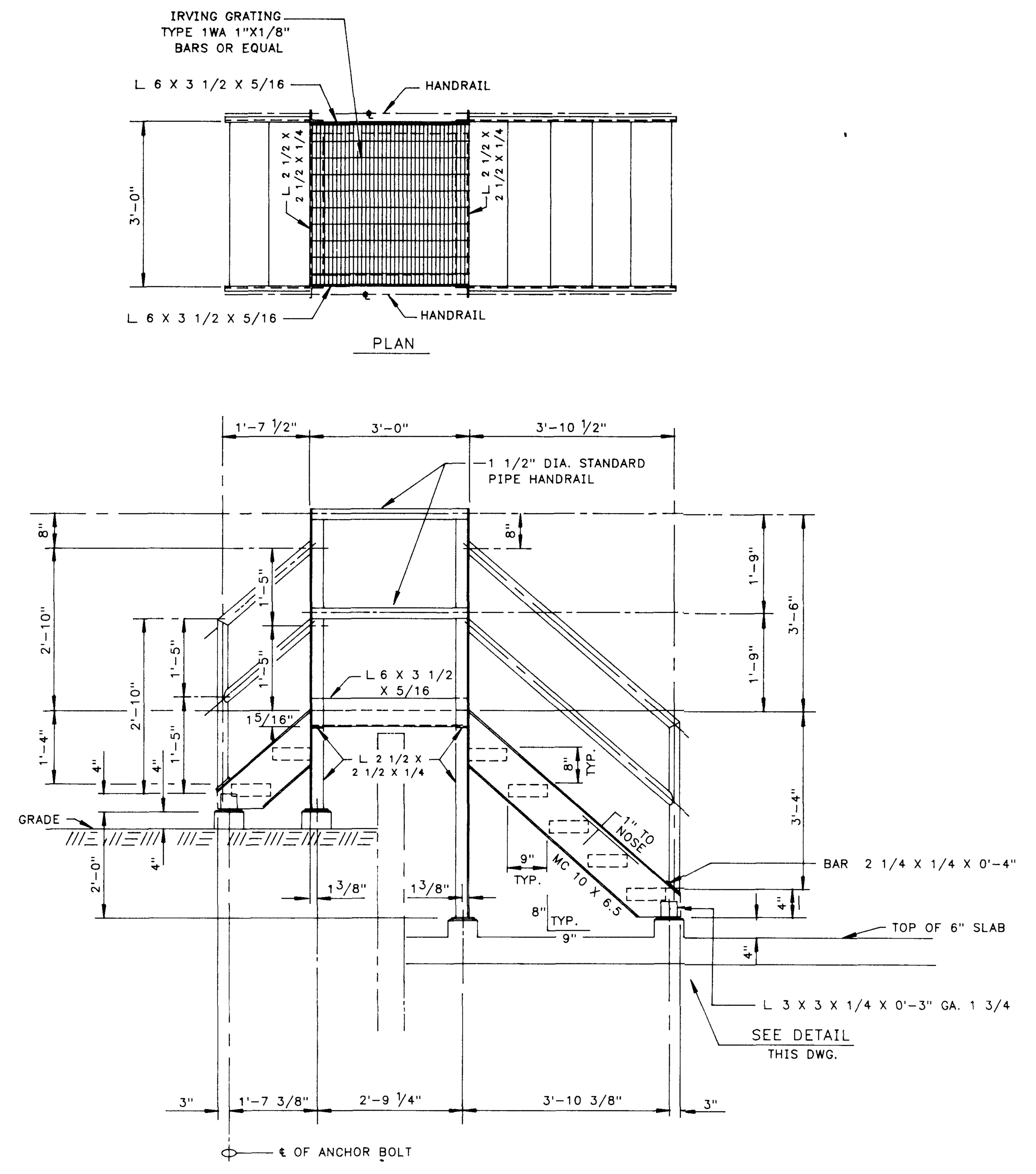

STILE
TYPE II
(1-REQUIRED)
SCALE: 1/2" = 1'-0"
DWG. 2BP-1-M92

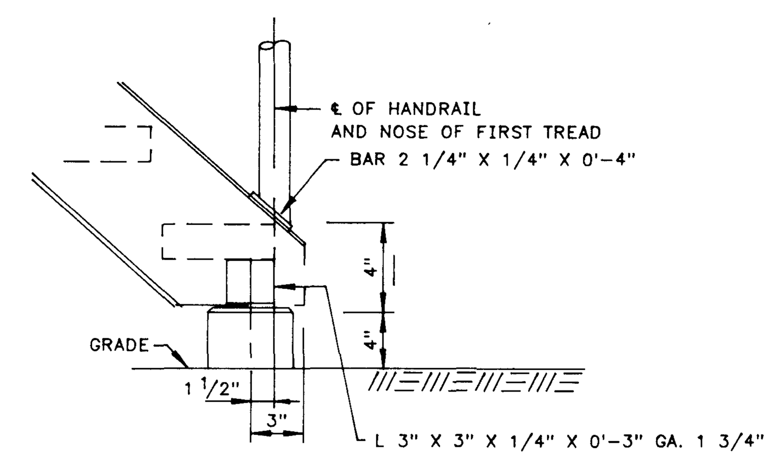

TYPICAL STILE DETAIL

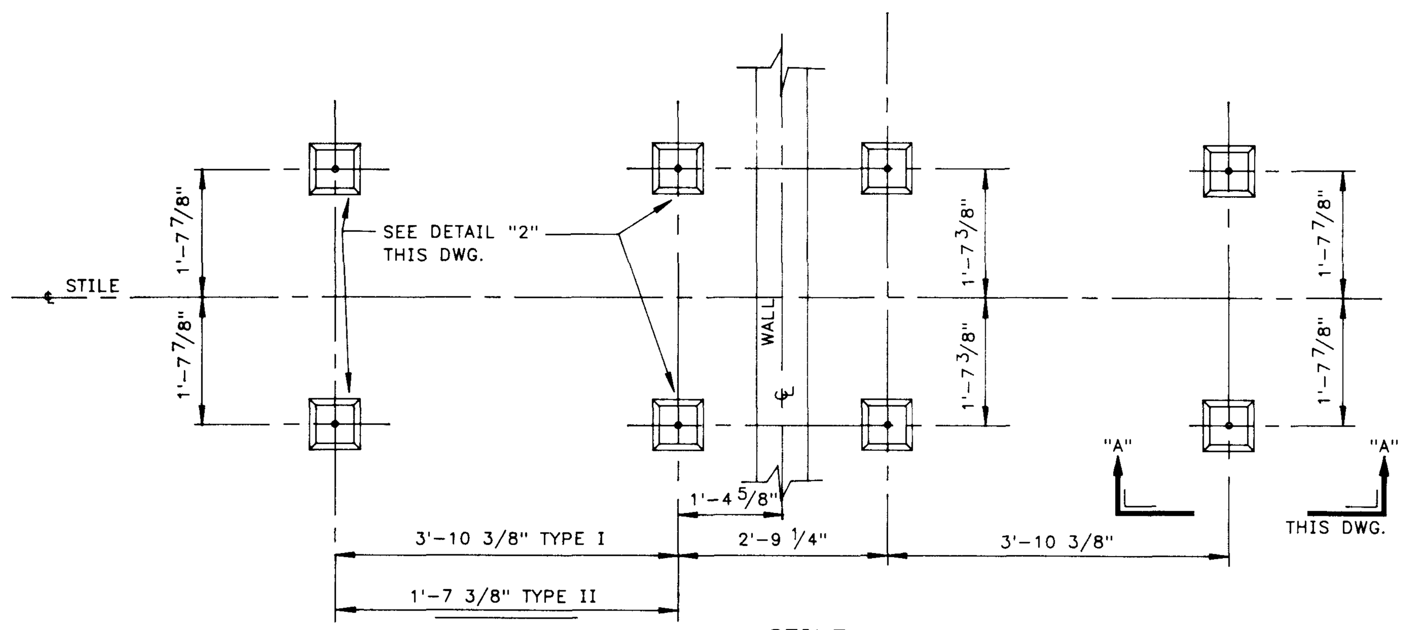

STILE
CONCRETE PIER SUPPORT PLAN
SCALE: 1/2" = 1'-0"

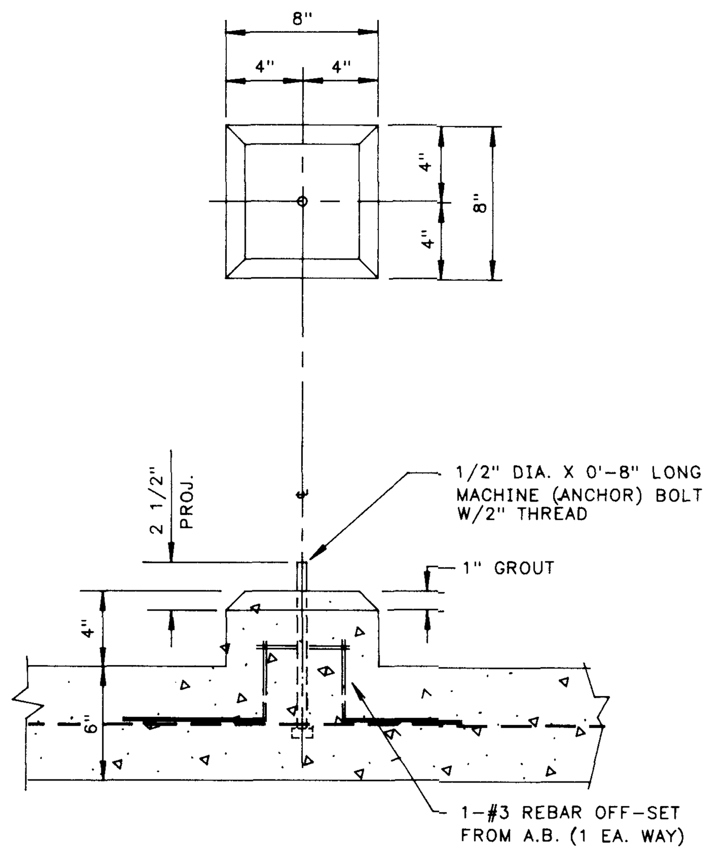

DETAIL NO.2
SCALE: 1 1/2" = 1'-0"
THIS DWG.

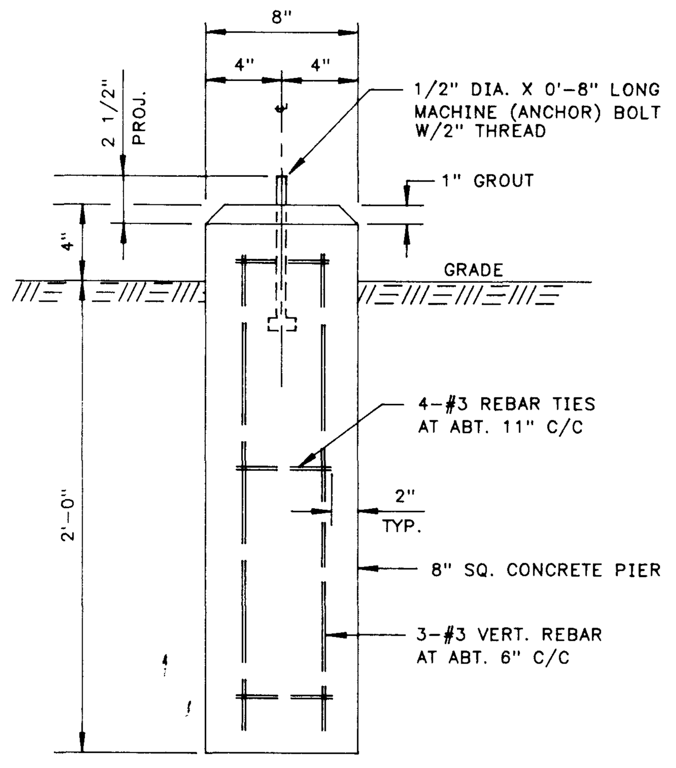

SECTION "A-A"
SCALE: 1 1/2" = 1'-0"
4-REQ'D. PER STILE
THIS DWG.

FM9 (Rev. 8/9/89)

LEGEND

DWG. NO.	TITLE
2BP-1-M92	BOTTOMS STORAGE AREA PLAN

REFERENCE DRAWINGS

NO.	DATE	BY	DESCRIPTION	W.O.	APP.

REVISIONS

PRT.	SEP.	DATE	TO	W.O.
1		10-23-89	INSPECTION	K-5431
4		10-23-89	CONTRACTS	K-5431

PRINT RECORD

ENG. RECORD		DATE
DRAFTING DESIGN	AEG	9/15/89
COMPUTER GRAPHICS	FB	10/20/89
CHECKED	AEG	10/22/89
PROJECT APPROVAL	[signature]	10/23/89
DESIGN APPROVAL		
COMPUTER SAVE NAME	BLA500	

El Paso
NATURAL GAS COMPANY

BLANCO GASOLINE ABSORPTION PLANT
SECONDARY CONTAINMENT DIKES
STILES
PLAN AND DETAILS

SCALE: NOTED
W.O.: K-5431
DWG. NO. 2BP-1-M99
REV.

10/21/89

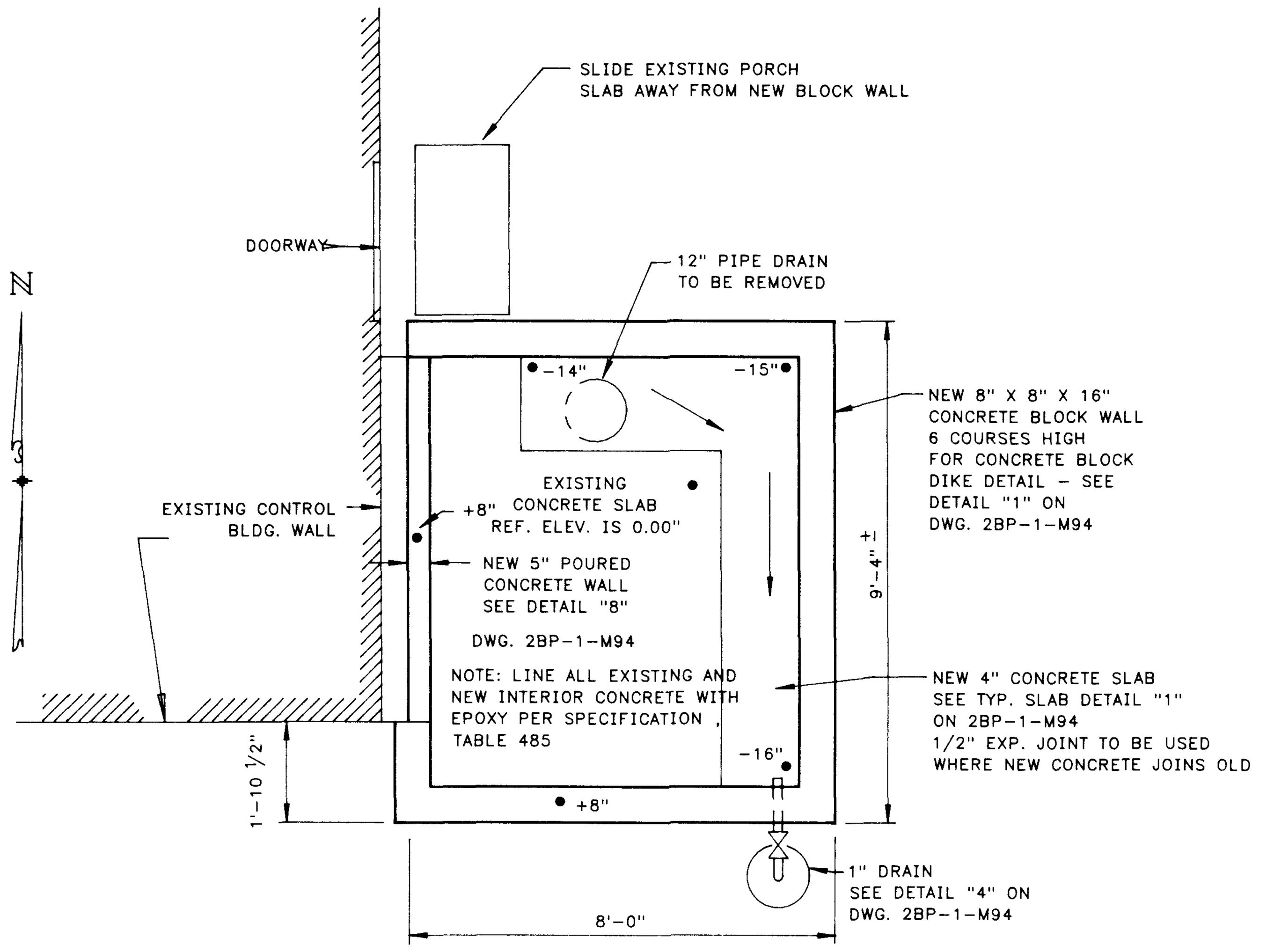

"C" PLANT AIR WASHERS ACID TANK
CONTAINMENT PLAN

SCALE: 3/8" = 1'-0"
W.O. L-3973

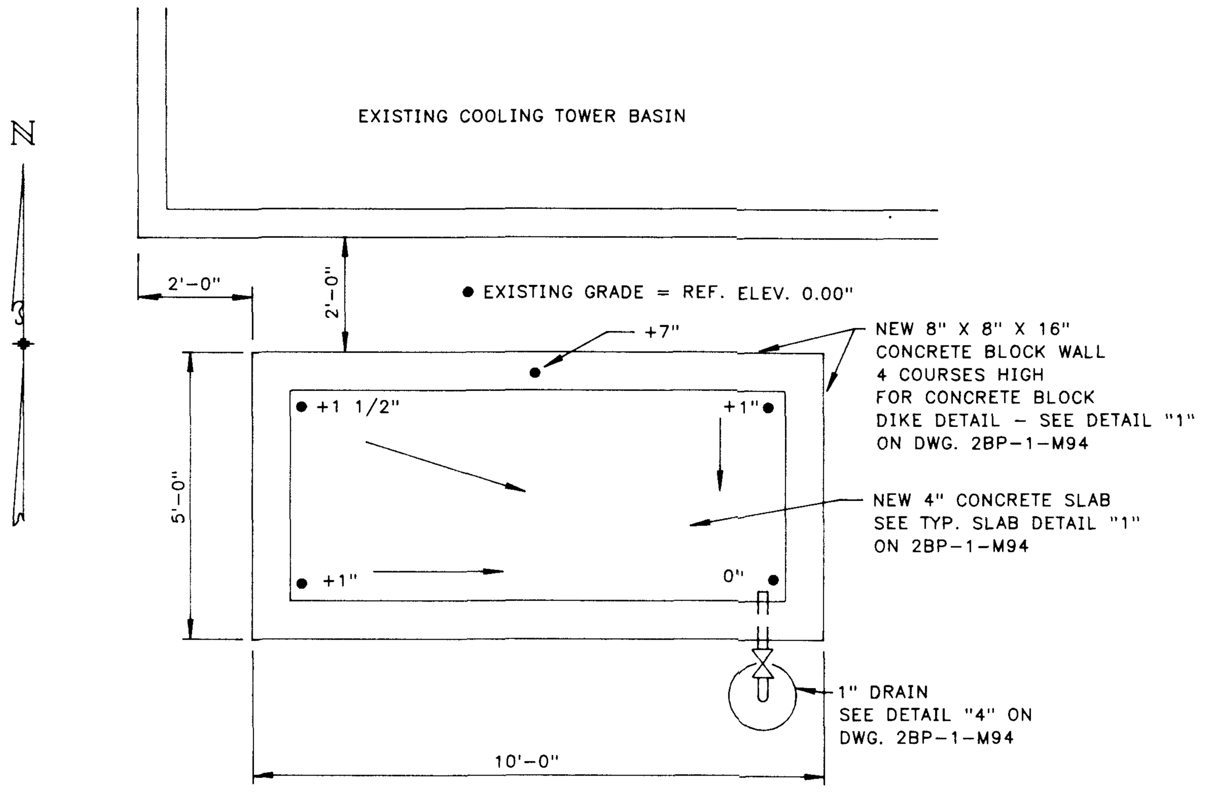

"C" PLANT COOLING TOWER OIL DRUMS
CONTAINMENT PLAN

SCALE: 3/8" = 1'-0"
W.O. L-3973

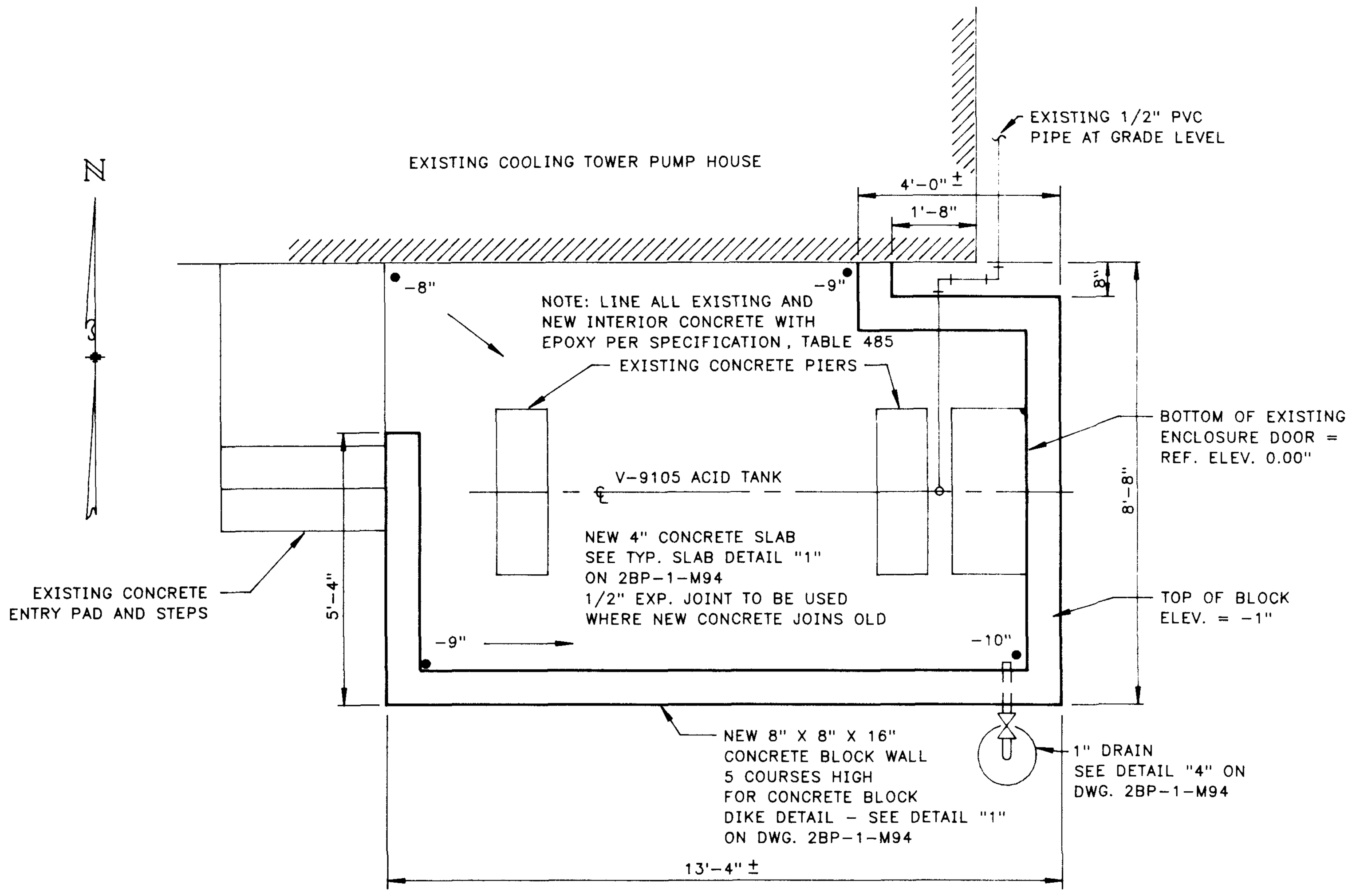

"C" COOLING TOWER ACID TANK
CONTAINMENT PLAN

SCALE: 3/8" = 1'-0"
W.O. L-3973

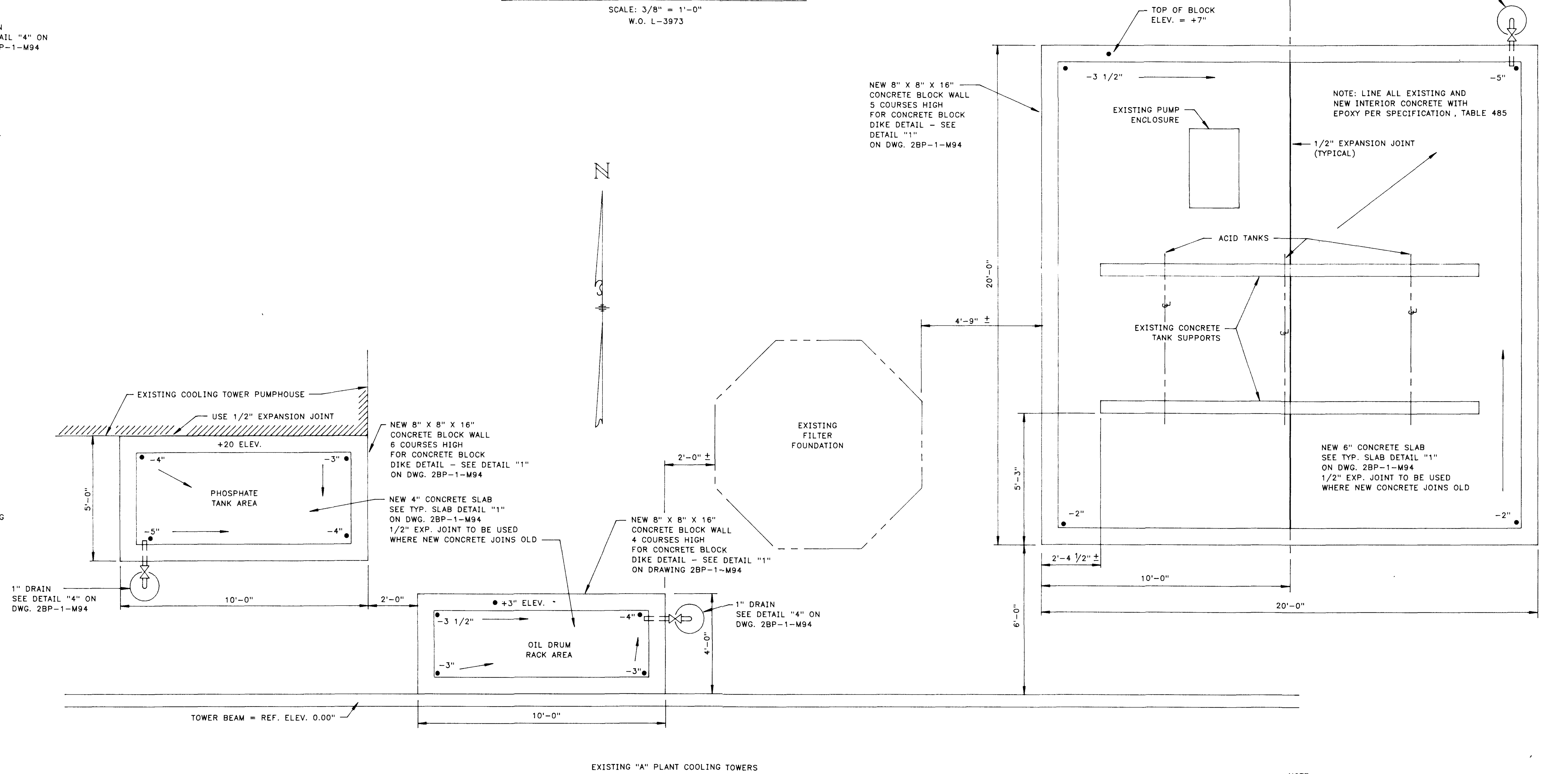

NOTE:
1. ● DENOTES SPOT ELEVATION ON SLAB.

PHOSPHATE TANK, OIL DRUMS & ACID TANKS CONTAINMENT PLAN

SCALE: 3/8" = 1'-0"
W.O. K-5431

FM9 (Rev. 8/9/89) LEGEND

DWG. NO.	TITLE
2BP-1-M86	LOCATION PLAN
2BP-1-M95	CONSTRUCTION DETAILS
2BP-1-M94	CONSTRUCTION DETAILS

REFERENCE DRAWINGS

NO.	DATE	BY	DESCRIPTION	W.O.	APP.

REVISIONS

PRT.	SEP.	DATE	TO	W.O.
1		11/29/91	[illegible]	
4		11/3/91	[illegible]	

PRINT RECORD

ENG. RECORD		DATE
DRAFTING DESIGN	DPH	9-89
COMPUTER GRAPHICS	GH	10-4-89
CHECKED	AEG	11/22/89
PROJECT APPROVAL	[illegible]	11/23/89
DESIGN APPROVAL		
COMPUTER SAVE NAME	BLA488	

El Paso
NATURAL GAS COMPANY

BLANCO GASOLINE ABSORPTION PLANT
SECONDARY CONTAINMENT DIKES
MISCELLANEOUS TANKS AND DRUMS

SCALE: SHOWN
W.O.: AS NOTED
DWG. NO. 2BP-1-M89
REV.

10/21/89

NOTES:

A. All Screwed Valves & Fittings in Steam & Condensate Service are to be Back Welded With the Exception of Connections to Traps & Equipment.

NO.	REVISIONS	DATE	BY	CK'D	APP'D
1	Changed Line № of relocated 66W-6" to 6"L19.50W.	10-3-57	B.Otis	BKL	McB
2	Added 2"L14.56M & Corr Elev's to suit Field TOC El 5583'-3 5/8"	10-16-57	B.Otis	DKL	McB
3	Corrected TOC Elevations	10-25-57	B.Otis	RKL	McB
4	Added PC-8121 Regulator Setting to SECT D-P109 & Changed L29.38 to PC-8121 from 3" Spec-H to 2" Spec-G. Added SECTION H-P109 - H-P109.	12-13-57	B.Otis		McB
5	Revised as per As-Built Field Notes	3-4-58	B.Otis		McB
6	" " " "	12-12-62	C.H.		
7	ADDED SECTION K-K & DETAIL 1 W.O. K-5431	10-19-??	DPH		

REFERENCE DRAWINGS	
2BP-8-P107	STORAGE AREA - PIPING PLAN NO. 1
2BP-8-P108	STORAGE AREA - PIPING PLAN NO. 2

PRINT RECORD ISSUED / REV. NO.	APP 10-1	REV-1 10/3/57	REV-2 10/16/57	REV-3 10-31-57	REV-4 12-13-57	REV-5 3-12-58	3/14/58	CERT 4/25/58
EPNG	Sepia	Sepia	Sepia	Sepia	Sepia	Sepia		
FCP	1	1	1	1	1			
H S OD	1	1	1	1	1			
SHOP	1	1	1	1	1			
MSB (2) PRS. TPB ENG. GM	6	6	6	6	6			
FIELD	6	6	6	6	6			

C.O. Walker

ENG. RECORD		
DRAWN	H. Killmer	7-29-57
CHECKED	DKL	10/1/57
MECH. CK.		
STRUCT. CK.	RLN	10-1-57
PIPING CK.		
ELECT. CK.	B	10-1-57
APPROVED		
APPROVED		

Stearns-Roger

THE STEARNS-ROGER MFG. CO. DENVER, COLORADO

STORAGE TANK AREA
PIPING SECTIONS
BLANCO DISTILLATE FRACTIONATOR ADDITION
EL PASO NATURAL GAS CO. FARMINGTON, NEW MEXICO

M. L. NO.

DWG. NO. 2BP-8

SHEET NO. P109

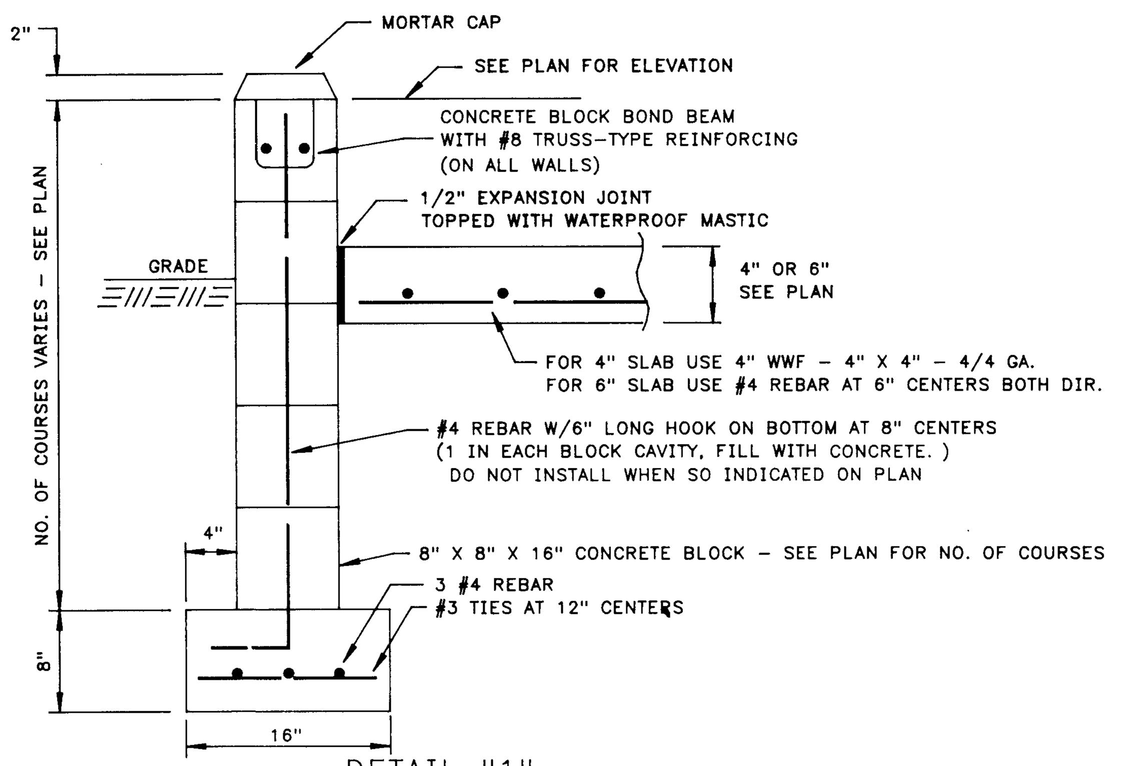

DETAIL "1"

TYPICAL CONCRETE BLOCK DIKE

SCALE: 1" = 1'-0"

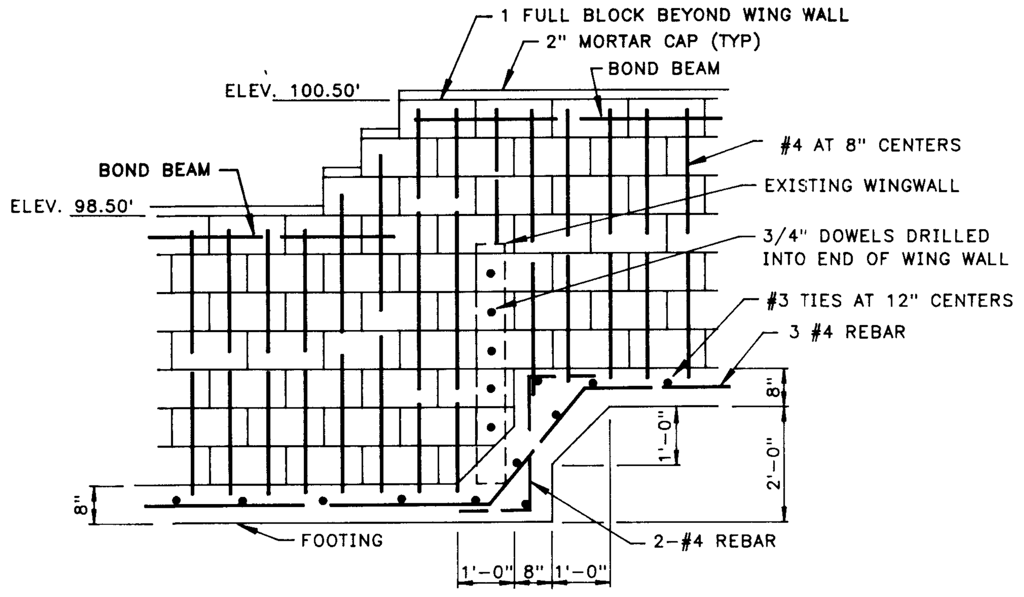

DETAIL "2"

AZTEC FIELD DRIP TANK
DETAIL AT CHANGE OF ELEVATION
SCALE: 3/8" = 1'-0"

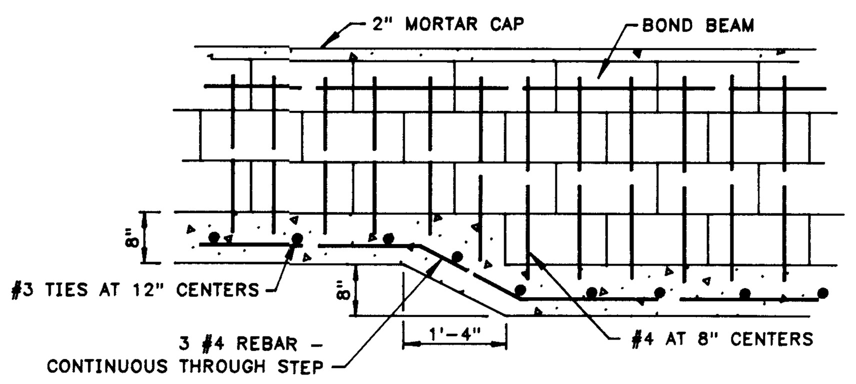

DETAIL "3"

FOOTING DETAIL FOR SLOPING TERRAIN
SCALE: 3/8" = 1'-0"

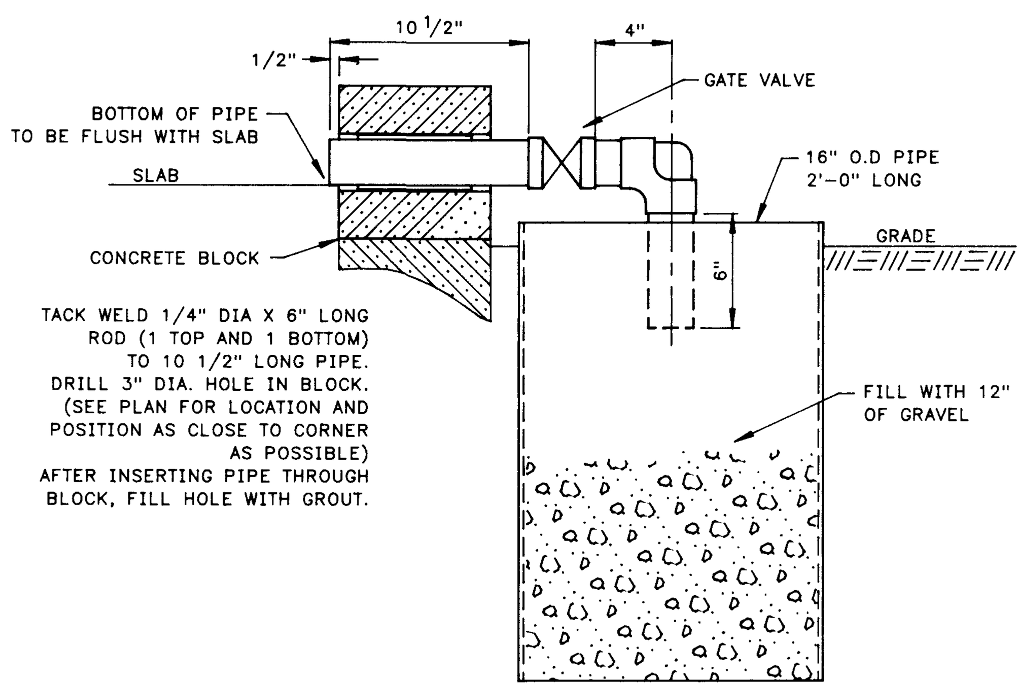

DETAIL "4"

TYPICAL DETAIL FOR 1" OR 2" DRAIN
SEE PLANS FOR LOCATION AND SIZE

SCALE: 1 1/2" = 1'-0"

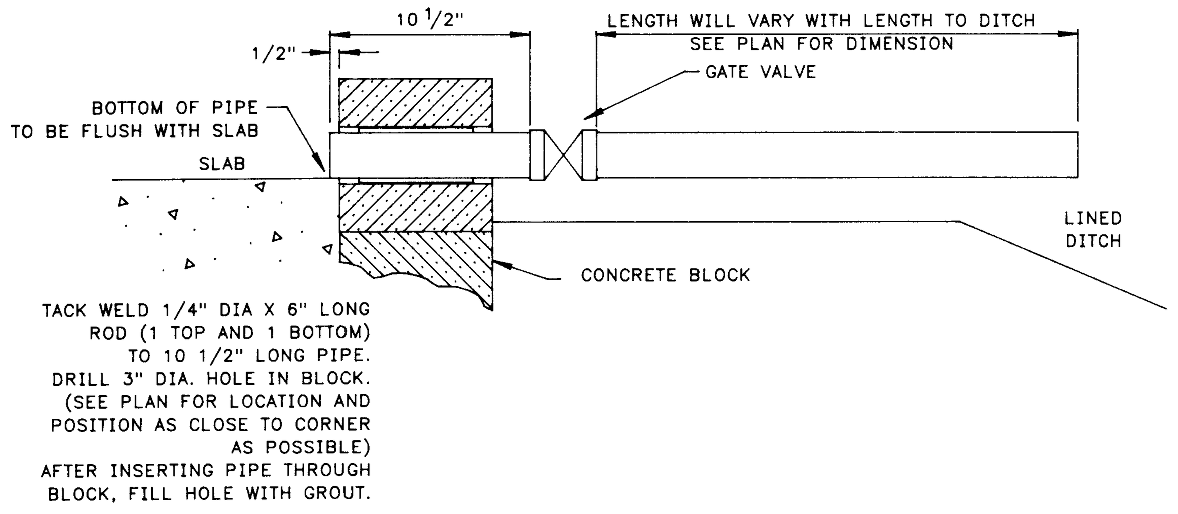

DETAIL "5"

TYPICAL 1" OR 2" DETAIL FOR DRAIN VALVES
SEE PLANS FOR LOCATION AND SIZE

SCALE: 1 1/2" = 1'-0"

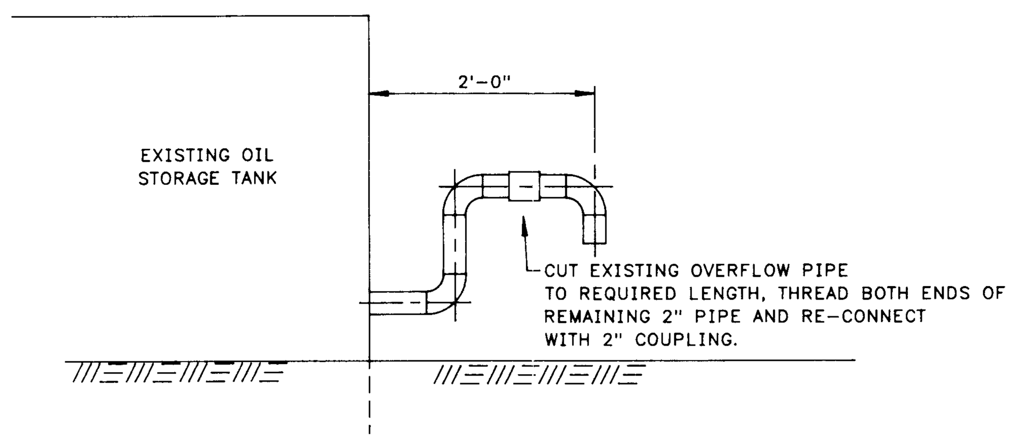

DETAIL "6"

OVERFLOW DETAIL AT AZTEC DRIP TANK

SCALE: 3/4" = 1'-0"

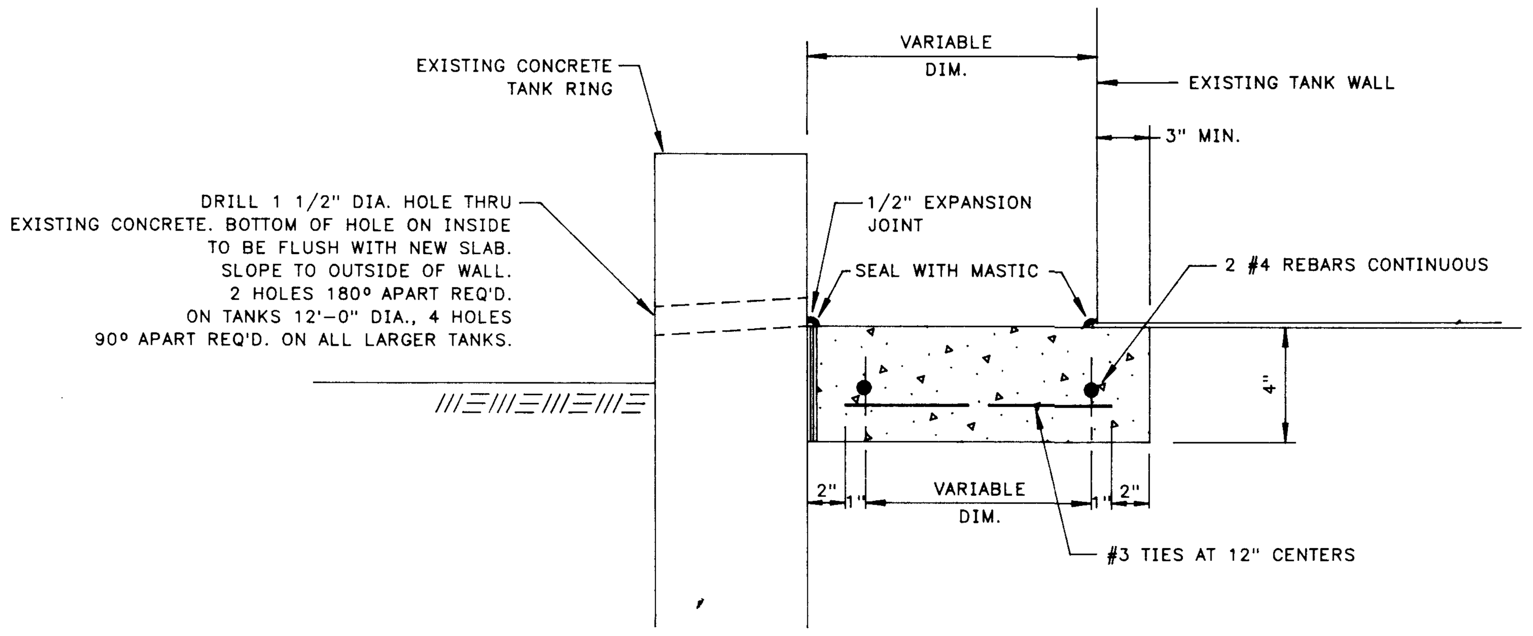

DETAIL "7"

CONCRETE SLAB DETAIL INSIDE TANK FOUNDATION RING

SCALE: 3/4" = 1'-0"

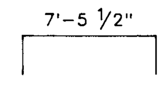

REBAR PATTERN

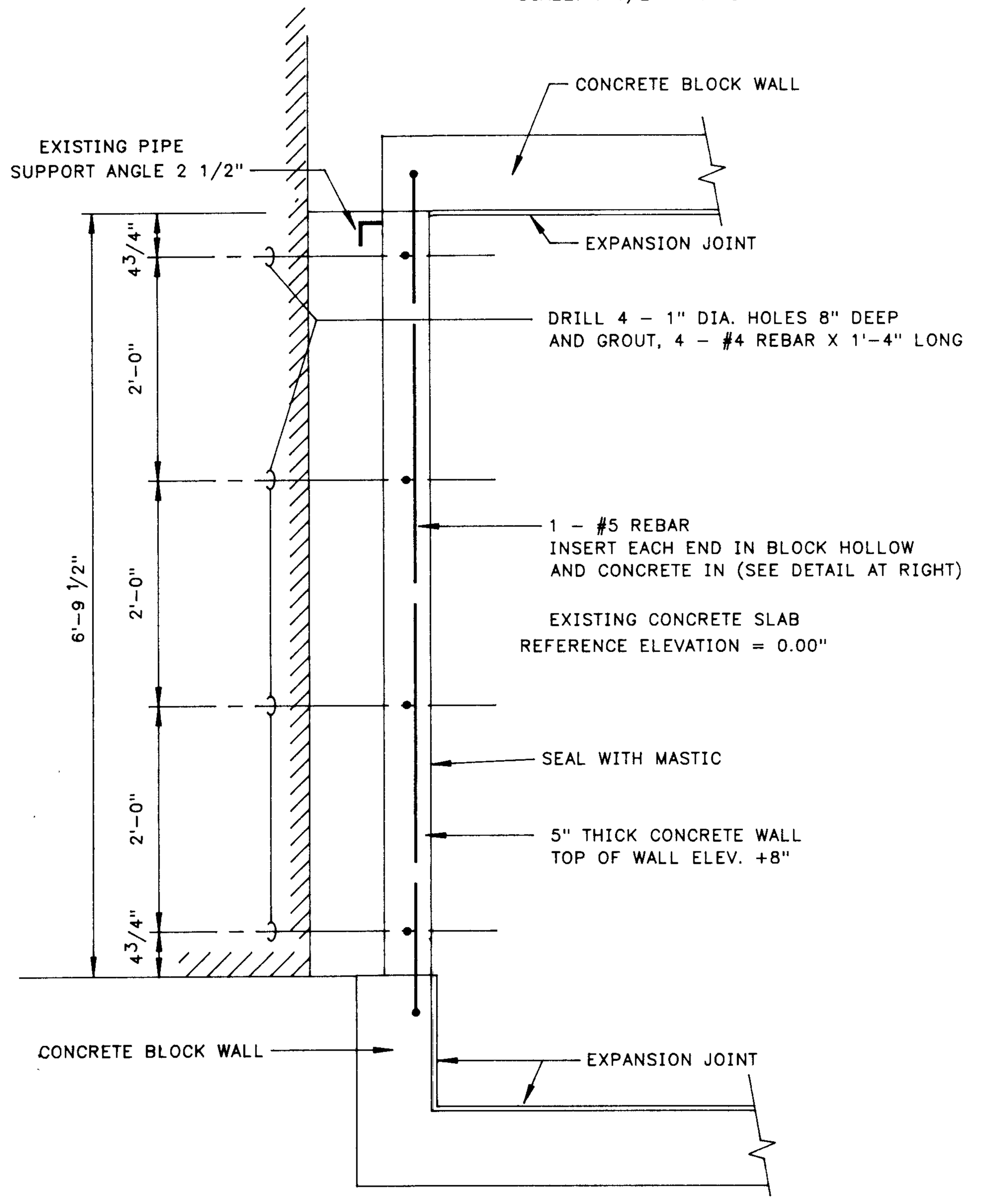

DETAIL "8"

PLAN AT - "C" PLANT AIR WASHERS ACID TANK

SCALE: 3/4" = 1'-0"

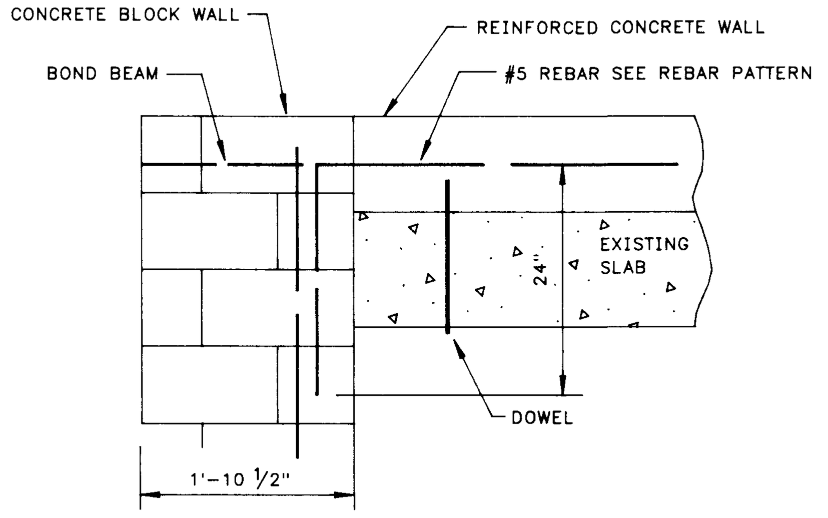

DETAIL

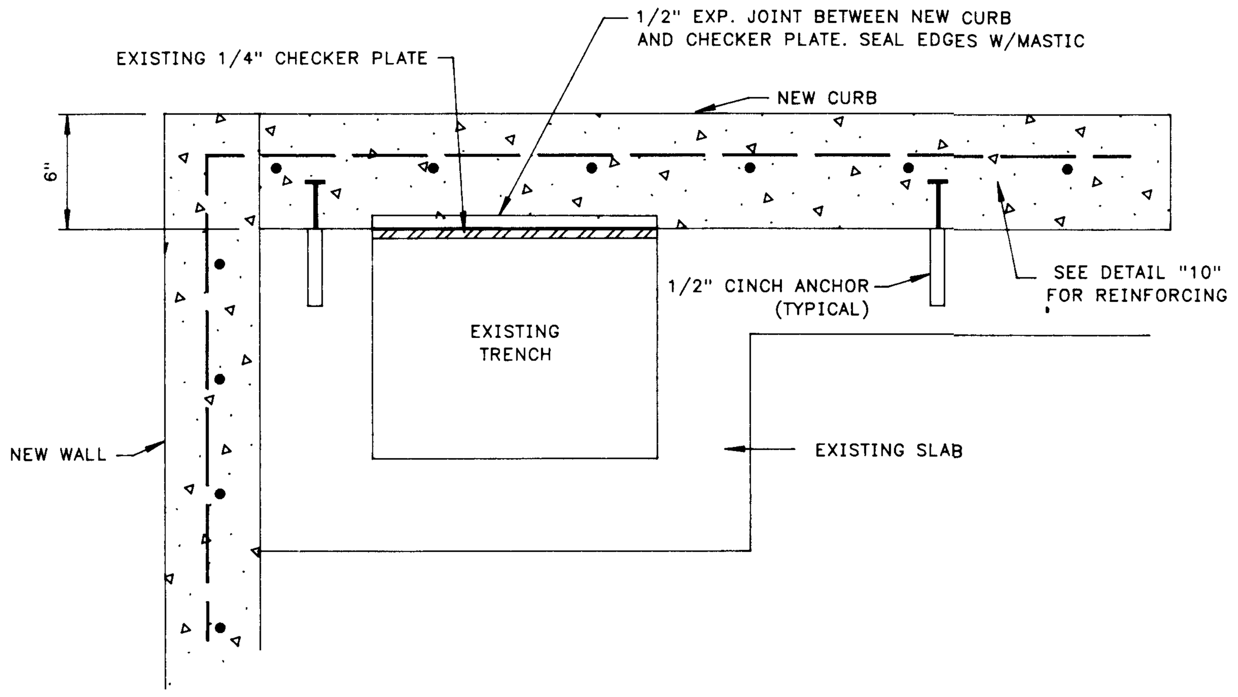

DETAIL "9"

DIKE DETAIL AT BOILER HOUSE

NOT TO SCALE

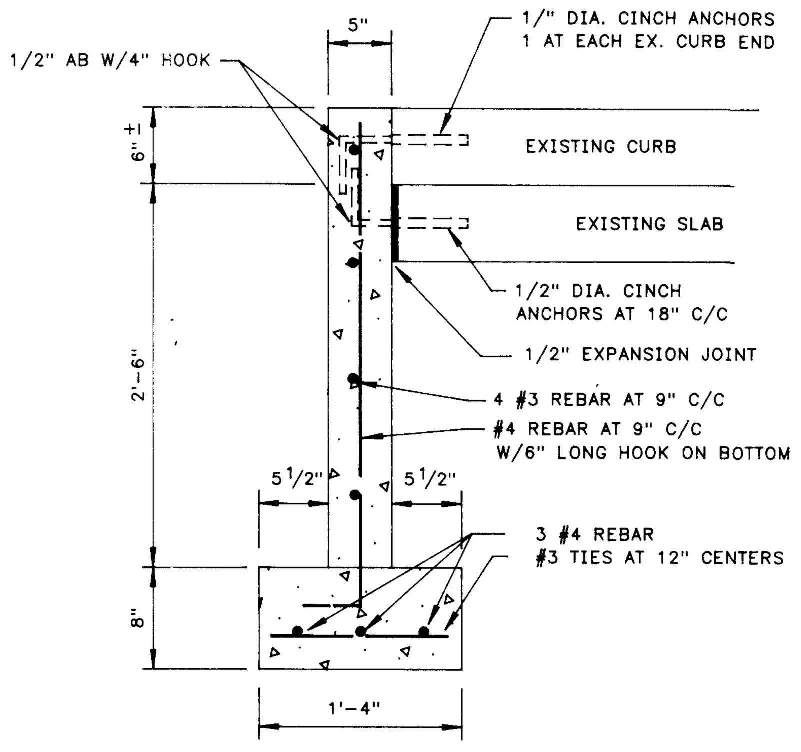

DETAIL "10"

TYPICAL CURB DETAIL AT SHIPPING PUMP & BOILER BLDG.

FOR LOCATION SEE 2BP-1-M90
SCALE: 1" = 1'-0"

LEGEND

DWG. NO.	TITLE
2BP-1-M91	SECONDARY CONTAIN. DIKES - PLAN
2BP-1-M90	SECONDARY CONTAIN. DIKES - PLAN
2BP-1-M89	SECONDARY CONTAIN. DIKES - PLAN
2BP-1-M88	SECONDARY CONTAIN. DIKES - PLAN
2BP-1-M87	LUBE OIL TANKS,"A","B","C" PLANTS PLAN

REFERENCE DRAWINGS

NO.	DATE	BY	DESCRIPTION	W.O.	APP.

REVISIONS

PRT.	SEP.	DATE	TO	W.O.
1		[illegible]	[illegible]	
4		[illegible]	[illegible]	

PRINT RECORD

ENG. RECORD		DATE
DRAFTING DESIGN	DPH	10-89
COMPUTER GRAPHICS	GH	10-11-89
CHECKED	AEG	12/22/89
PROJECT APPROVAL	[illegible]	12/23/89
DESIGN APPROVAL		
COMPUTER SAVE NAME	BLA496	

El Paso
NATURAL GAS COMPANY

BLANCO PLANT
SECONDARY CONTAINMENT DIKES
FOUNDATION DETAILS

SCALE: SHOWN
W.O.:
DWG. NO. 2BP-1-M94
REV.

FM9 (Rev. 8/9/89)

10/21/89

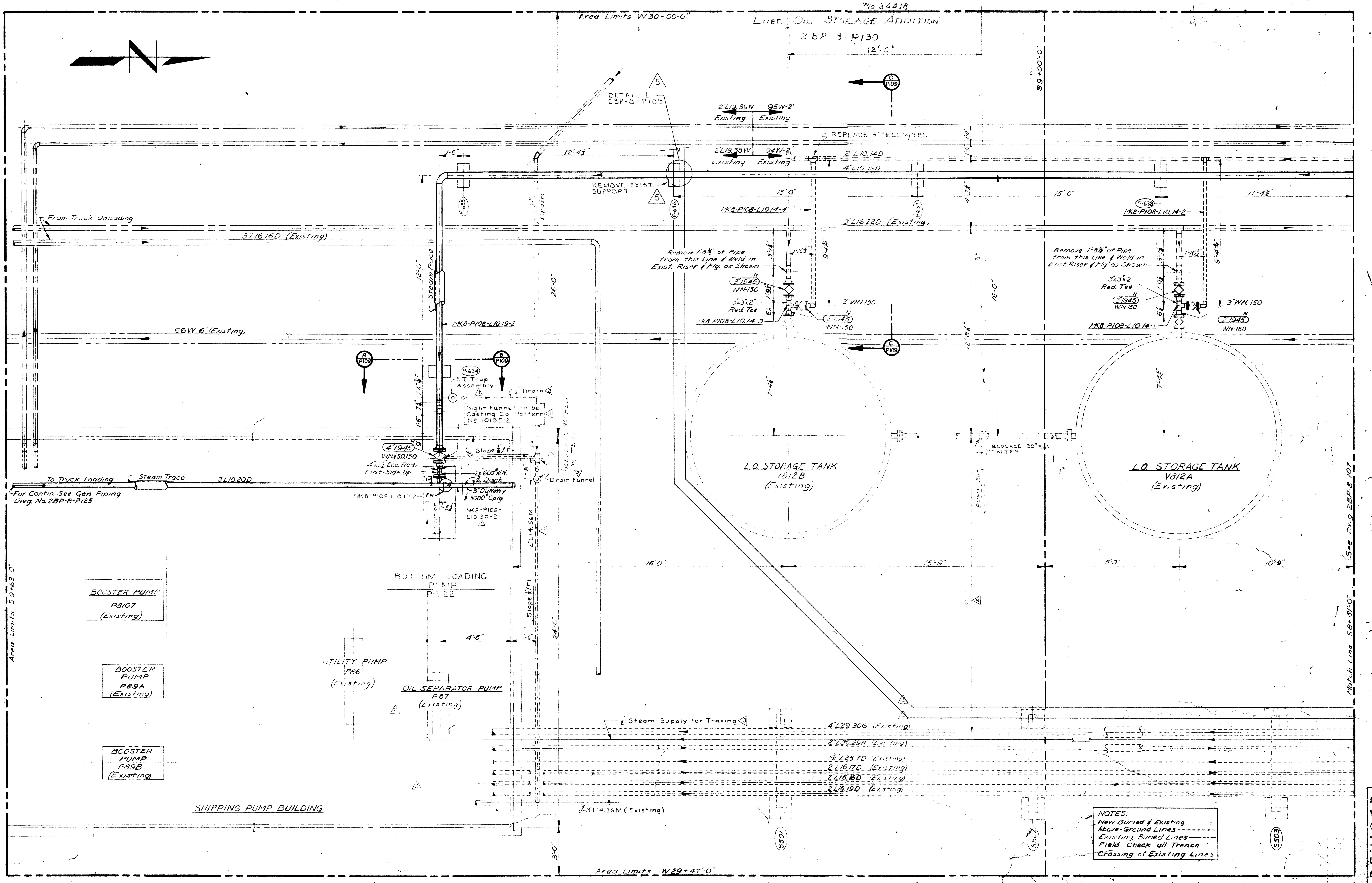

REVISED
MAR 12 1958
APPROVED FOR CONSTRUCTION
The Stearns-Roger Mfg. Co.

△5 NOTE:
SEE DWG. 2BP-1-M92 FOR DIKES

NO.	REVISIONS	DATE	BY	CK'D	APP'D
1	Added Pier No's, Relocated MK8-P108-L10.20-2, Added 2"L14.56M	10-11-57	B.Otis	DKL	McB
2	Removed 3"L29.38H & 1½"L30.33H together w/Brackets on the existing Pipe Supports, Valves, Dimensions & Notes	12-13-57	B.Otis		McB
3	Revised as per As-Built Field Notes	3-4-58	B.Otis		McM
4	REVISED PER FIELD DWGS. W/O 34418, ADD STG. TANK NOTE	5/14/62	V		
5	ADDED DIKE & DETAIL 1 W.O. 5-8975	10-19-69	DPH		

REFERENCE DRAWINGS	
2BP-8-P107	STORAGE AREA - PIPING PLAN NO.1

PRINT RECORD ISSUED / REV. NO.	APP. 10-1	Rev-1 11-11-57	Rev-2 12-13-57	Rev-3 3-12-58	3/14	Ed. 5 11/23/87
	SEPIA	Sepia	SEPIA	Sepia		
EPNG	1	1				
FCP	1	1	1			
H S O'D	1	1	1			
SHOP	1	1	1			
HSB (2) PRS, TFB ENG, GM	6	6	6			
FIELD	6	6	6			

ENG. RECORD		
DRAWN	H.Killmer	7-18-57
CHECKED	DKL	10/1/57
MECH. CK.		
STRUCT. CK.	RLN	10-1-57
PIPING CK.		
ELECT. CK.	B	10-1-57
APPROVED		
APPROVED	McC	10-1-57

Stearns-Roger
THE STEARNS-ROGER MFG. CO. DENVER, COLORADO

STORAGE TANK AREA
PIPING PLAN NO. 2
BLANCO DISTILLATE FRACTIONATOR ADDITION
EL PASO NATURAL GAS CO. FARMINGTON, NEW MEXICO

SCALE: ⅜"=1'-0" ORDER NO. 8-3160 M.L. NO.

DWG. NO. 2BP-8-
SHEET NO. P108
REV. 5

C.O. Walker
1 SEPIA 6-25-69 H. Copeland

NO.	REVISIONS	DATE	BY	CK'D	APP'D
1	Changed Line Nº of relocated 66W-6" to 6"L19.50W	10-3-57	B.Otis	DKL	MCB
2	Added Pier Nº's & Ref Dwg 2BP-8-P125	10-11-57	B.Otis	DKL	MCB
3	Changed L29.38 from 3" to 2" & from Spec H to G to PC-8121 Tied L29.38 into exist 4"L29.30G & L30.33H into exist 2"L30.29H. Added PC-8121, PSV-8176 & SECT H P109 - H P109	12-12-57	B.Otis		MCB
4	Revised as per As-Built Field Notes	3-4-58	B.Otis		MCB
5	" " " " W/O 34463				
6	REVISED LINE 2" L10.18D & CUT SECTION K-K W/O K-5431	10-10-6?	DPH		

REFERENCE DRAWINGS	
2BP-8-101	PROCESS FLOW DIAGRAM
2BP-8-102	MECH. FLOW DIAG. - DIST. FRACT. ADDITION
2BP-8-103	MECH. FLOW DIAG. - FLARE, DR. & WATER
2BP-8-104	PLOT PLAN - PLANT AREA
2BP-8-106	EQUIP. LAYOUT - STORAGE AREA
2BP-8-4104	FNDN. PLAN & SECT. - STORAGE AREA
2BP-8-P108	PIPING PLAN NO. 2 - STORAGE AREA
2BP-8-P125	GEN. PIPING - STORAGE AREA
2BP-8-P127	STORAGE AREA - STEAM TRACING

PRINT RECORD ISSUED / REV. NO.	APP 10-1	REV 10/3/57	REV 2 10/22/57	REV 3 12-12-57	REV 4 3-12-58	3/14
	SEPIA	Sepia	Sepia	SEPIA	Sepia	
EPNG						
FCP	1	1	1	1		
H S O'D	1	1	1	1		
SHOP	1	1	1	1		
ENG.	6	6	6	6		
FIELD	6	6	6	6		
C.O. Walker						2

ENG. RECORD		
DRAWN	H Hillmer	7-12-57
CHECKED	DKL	10/1/57
MECH. CK.		
STRUCT. CK.	RLN	10-1-57
PIPING CK.		
ELECT. CK.	PB	10-1-57
APPROVED		
APPROVED	MCB	10-1-57

Stearns-Roger
THE STEARNS-ROGER MFG. CO. DENVER COLORADO

STORAGE TANK AREA
PIPING PLAN NO. 1
BLANCO DISTILLATE FRACTIONATOR ADDITION
EL PASO NATURAL GAS CO. FARMINGTON, NEW MEXICO
SCALE ⅜" = 1'-0"

DWG. NO. 2BP-8
SHEET NO. P-107

NO.	REVISIONS	DATE	BY	CK'D	APP'D
1	Moved G-Fin Structure & E-8131 1'-0" North	7-26-57	B.Otis	✓	
2	Chg. Dim. of New Pipe Rack from 10'-0" to 8'-0", Added Pumps & chg. size of P.H.	8-2-57	HPK/HRW		MMB
3	Corr. Pump Dims and removed rack under existing rack at (12-B)	9-30-57	RJ	AJ	MMB
4	Corr. Corridinates of V-8127 & Dike Elev.	10/18/57	B.Otis	BKK	McB
5	REV. DIKE ELEVATIONS & ADDED 4" DRAIN W.O. R-15431	5-29-58	DPH		

REFERENCE DRAWINGS	
2BP-8-204	PLOT PLAN - PLANT AREA
2BP-8-P101	PIPING PLAN-DISTILLATE FRACT. AREA
2BP-8-P1	PIPING PLAN-PUMP BLDG. AREA
2BP-8-P105	PIPING PLAN-FEED TANK AREA
2BP-8-M101	FDTN PLAN & SECT. DIST. FRACT. AREA
2BP-8-M102	FDTN PLAN & SECT. DIST. FRACT. AREA
2BP-8-M104	FDTN PLAN & SECT - FEED TANK AREA
2BP-8-M108	FDTN PLAN & SECT - PUMP BLDG. AREA

PRINT RECORD ISSUED / REV. NO.	APVD 6-22	REV 8-28	REV 9-1-57	REV 9-30-57	REV 4 10/22/57
EPNG	1 Sepia	1 Sepia	1 Sepia	1 Sepia	Sepia
FCP-SNR	2	2	2	2	2
H.S.O'D.	1	1	1	1	1
TGS-AC	2	2	2	2	2
VDF	1	1	1	1	1
McB RES TFB EWC GM	6	6	6	6	6
FIELD	6	6	6	6	6

BLANCO 5

ENG. RECORD		
DRAWN	Bill Otis	6-21-57
CHECKED	McB	6-21-57
MECH. CK.		
STRUCT. CK.	RLN	6-21-57
PIPING CK.		
ELECT. CK.	[illegible]	6/21/57
APPROVED		
APPROVED	MMB	6-21-57

Stearns-Roger
THE STEARNS-ROGER MFG. CO. DENVER, COLORADO

DISTILLATE FRACT., PUMP BUILDING & FEED TANK AREAS
EQUIPMENT LAYOUT
BLANCO DISTILLATE FRACTIONATOR ADDITION
EL PASO NATURAL GAS CO. FARMINGTON, NEW MEXICO

SCALE 1/8" = 1'-0" | ORDER NO. 8-13160 | M.L. NO.

DWG. NO. 2BP-8
SHEET NO. 105
REV. 5

2BP-8-M81

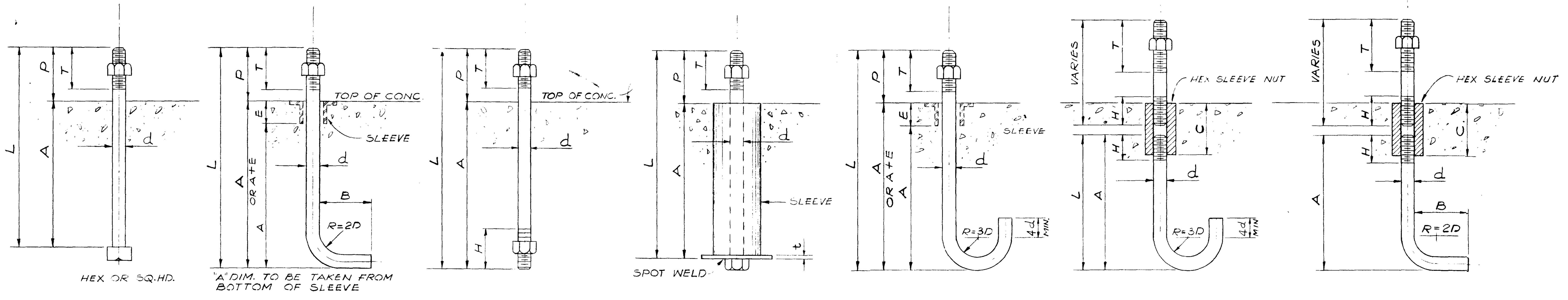

TYPE I
L = A+P

TYPE II
CUTTING LGTH.=L+B

TYPE III
L=A+P

TYPE IV
L=A+P+t

TYPE V
CUTTING LGTH=L+11d

ASSEMBLY~A
TYPES III & V

ASSEMBLY~B
TYPES II & III

NOTE:
"H" THD. LENGTH ON TYPES II & V ANCHOR BOLTS USED FOR ASSEMBLIES "A" & "B" ONLY

DESIGN NOTES

SHEAR VALUES ARE BASED ON THE ALLOWABLE SPECIFIED BY THE UNIFORM BUILDING CODE, 1973 EDITION, FOR BOLTS UP TO 1 1/4" DIAMETER AND PROJECTED VALUES FOR LARGER DIAMETERS.

TENSION CAPACITIES FOR TYPES I, II AND III BOLTS ARE LIMITED BY BOND IN ACCORDANCE WITH THE ACI "BUILDING CODE REQUIREMENTS FOR REINFORCED CONCRETE" ACI 318-63, ON THE OVERALL EMBEDDED LENGTH OF BOLT LESS THE SLEEVE DEPTH. BOND ALLOWABLE $2.4\sqrt{3000}/D$

TENSION CAPACITIES FOR TYPE IV ARE LIMITED BY THE AMERICAN STANDARD BOLT TENSION OF 14000 PSI AT THE ROOT OF THREAD AND THE BEARING OF 750 PSI FOR 3000 LBS COCRETE. THE PLATE IS DESIGNED FOR A36 STEEL.

TENSION CAPACITIES FOR ASSEMBLY "A" AND ASSEMBLY "B" ARE LIMITED BY A STRESS OF 22,000 PSI ON THE AREA OF BOLT AT THE ROOT OF THE THREAD. THE HOOK DEVELOPS 10,000 PSI ON THE GROSS AREA OF THE BOLT AND THE REMAINING TENSION IS DEVELOPED BY BOND IN ACCORDANCE WITH THE ACI "BUILDING CODE REQUIREMENTS FOR REINFORCED CONCRETE", ACI 318-63, ON THE STRAIGHT EMBEDDED SECTION OF BOLT LESS THE SLEEVE DEPH. BOND ALLOWABLE $2.4\sqrt{3000}/D$

IF SPACE RESTRICTS LENGTH "A" TO LESS THAN THE RECOMMENDED VALUE TABULATED, REDUCE THE TENSION VALUE BY THE REDUCTION VALUE "R" (W x d) SHOWN FOR EACH INCH BY WHICH "A" IS REDUCED

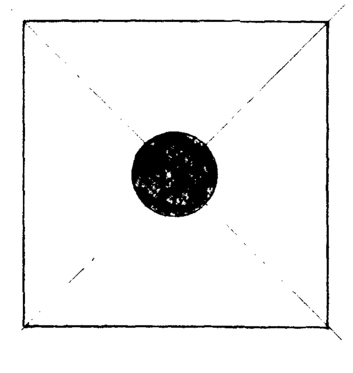

ANCHOR BOLTS TYPES I THRU V

MARK	1/2A	1/2B	1/2C	1/2E	1/2G
D	1/2φ	1/2φ	1/2φ	1/2φ	1/2φ
L	1'-0	1'-3	1'-6	1'-9	2'-0
B	4	4	4	4	4
T	2	2	2	2	2

MARK	5/8A	5/8C	5/8E	5/8G	5/8K
D	5/8φ	5/8φ	5/8φ	5/8φ	5/8φ
L	1'-0	1'-6	1'-9	2'-0	2'-6
B	4	4	4	4	4
T	2 1/2	2 1/2	2 1/2	2 1/2	2 1/2

MARK	3/4A	3/4C	3/4E	3/4G	3/4K	3/4M	3/4O
D	3/4φ	3/4φ	3/4φ	3/4φ	3/4φ	3/4φ	3/4φ
L	1'-0	1'-6	1'-9	2'-0	2'-6	2'-9	3'-0
B	6	6	6	6	6	6	6
T	2 1/2	2 1/2	2 1/2	2 1/2	2 1/2	2 1/2	2 1/2

MARK	7/8C	7/8G	7/8K	7/8O
D	7/8φ	7/8φ	7/8φ	7/8φ
L	1'-6	2'-0	2'-6	3'-0
B	6	6	6	6
T	3	3	3	3

MARK	1C	1G	1K	1O	1P
D	1φ	1φ	1φ	1φ	1φ
L	1'-6	2'-0	2'-6	3'-0	3'-6
B	6	6	6	6	6
T	3 1/2	3 1/2	3 1/2	3 1/2	3 1/2

MARK	1 1/8C	1 1/8G	1 1/8K	1 1/8O
D	1 1/8φ	1 1/8φ	1 1/8φ	1 1/8φ
L	1'-6	2'-0	2'-6	3'-0
B	8	8	8	8
T	3 1/2	3 1/2	3 1/2	3 1/2

MARK	1 1/4G	1 1/4K	1 1/4O	1 1/4P	1 1/4R
D	1 1/4φ	1 1/4φ	1 1/4φ	1 1/4φ	1 1/4φ
L	2'-0	2'-6	3'-0	3'-6	4'-0
B	8	8	8	8	8
T	4	4	4	4	4

MARK	1 3/8G	1 3/8K	1 3/8O	1 3/8P	1 3/8R
D	1 3/8φ	1 3/8φ	1 3/8φ	1 3/8φ	1 3/8φ
L	2'-0	2'-6	3'-0	3'-6	4'-0
B	8	8	8	8	8
T	4	4	4	4	4

MARK	1 1/2G	1 1/2K	1 1/2O	1 1/2P	1 1/2R
D	1 1/2φ	1 1/2φ	1 1/2φ	1 1/2φ	1 1/2φ
L	2'-0	2'-6	3'-0	3'-6	4'-0
B	8	8	8	8	8
T	4 1/2	4 1/2	4 1/2	4 1/2	4 1/2

MARK	1 3/4K	1 3/4O	1 3/4P	1 3/4R	1 3/4S	1 3/4T	1 3/4U
D	1 3/4φ	1 3/4φ	1 3/4φ	1 3/4φ	1 3/4φ	1 3/4φ	1 3/4φ
L	2'-6	3'-0	3'-6	4'-0	4'-6	5'-0	5'-6
B	10	10	10	10	10	10	10
T	4 1/2	4 1/2	4 1/2	4 1/2	4 1/2	4 1/2	4 1/2

MARK	2O	2P	2R	2S	2T	2U
D	2φ	2φ	2φ	2φ	2φ	2φ
L	3'-0	3'-6	4'-0	4'-6	5'-0	5'-6
B	10	10	10	10	10	10
T	4 1/2	4 1/2	4 1/2	4 1/2	4 1/2	4 1/2

MARK	2 1/4P	2 1/4R	2 1/4S	2 1/4T	2 1/4U
D	2 1/4φ	2 1/4φ	2 1/4φ	2 1/4φ	2 1/4φ
L	3'-6	4'-0	4'-6	5'-0	5'-6
B	10	10	10	10	10
T	5	5	5	5	5

MARK	2 1/2P	2 1/2R	2 1/2S	2 1/2T	2 1/2U	2 1/2W
D	2 1/2φ	2 1/2φ	2 1/2φ	2 1/2φ	2 1/2φ	2 1/2φ
L	3'-6	4'-0	4'-6	5'-0	5'-6	6'-0
B	12	12	12	12	12	12
T	5 1/2	5 1/2	5 1/2	5 1/2	5 1/2	5 1/2

BOLT DIA d	SHEAR ALL TYPES		TENSION TYPE I		TENSION TYPE II & III			TENSION TYPE IV			TENSION TYPE V & VI		TENSION REDUCTION	THRD. LGTH.	THRD. LGTH.	HEX SLEEVE NUT	SLEEVES		BOLT DIA d
	MIN "A" IN.	SHEAR CAPACITY LBS.	MIN "A" IN.	TENSION CAPACITY LBS.	MIN "A" IN.	MIN B IN.	TENSION CAPACITY LBS.	MIN. "A" IN.	PLATE MK.	TENSION CAPACITY LBS.	MIN "A" IN.	TENSION CAPACITY LBS.	R LBS.	T IN.	H IN.	C IN.	D IN	E IN.	
1/2	4	750	7	1800	7	4	2700	7	AP-1A	1800			500(d)	2			2	4	1/2
5/8	4	1000	9	2800	10	4	4400	9	AP-1B	2800			500(d)	2 1/2			2	4	5/8
3/4	5	1500	11	4100	12	6	6700	11	AP-1C	4200	14	6600	500(d)	2 1/2	7/8	2	2 1/2	4	3/4
7/8	6	2000	14	5700	14	6	8300	14	AP-2A	5800	14	9250	470(d)	3	1	2 1/4	2 1/2	6	7/8
1	7	2500	16	6600	16	6	9000	16	AP-2B	7700	14	12100	410(d)	3 1/2	1 1/8	2 1/2	3	6	1
1 1/8	8	3000	18	7400	18	8	10700	18	AP-2C	9700	16	15200	364(d)	3 1/2	1 1/4	2 3/4	3	6	1 1/8
1 1/4	9	3500	20	8200	20	8	11500	20	AP-3A	12500	22	18600	330(d)	4	1 3/8	3	3	8	1 1/4
1 3/8	10	4000	22	9000	22	8	12300	22	AP-3B	14700	27	23100	298(d)	4	1 1/2	3 1/4	3	8	1 3/8
1 1/2	11	4400	24	9800	24	8	13100	24	AP-3C	18000	31	28200	273(d)	4 1/2	1 5/8	3 1/2	3	8	1 1/2
1 3/4	13	5000	28	11500	28	10	15600	28	AP-4A	24400	43	38300	236(d)	4 1/2	1 7/8	4	4	10	1 3/4
2	15	5600	32	13000	32	10	17200	32	AP-5A	32200	55	50500	204(d)	4 1/2	2 1/8	4 1/2	4	10	2
2 1/4	17	6200	36	14700	36	10	18500	36	AP-5B	42200	75	66500	182(d)	5	2 3/8	5	4	12	2 1/4
2 1/2	19	6800	40	16300	40	12	21200	40	AP-6A	52000	91	82000	164(d)	5 1/2	2 5/8	5 1/2	4	12	2 1/2

ANCHOR PLATE SCHEDULE

MK-NO	PLATE SIZE	HOLE SIZE
AP-1A	1/2 x 4 x 0'-4"	9/16
AP-1B	1/2 x 4 x 0'-4"	11/16
AP-1C	1/2 x 4 x 0'-4"	13/16
AP-2A	3/4 x 6 x 0'-6"	15/16
AP-2B	3/4 x 6 x 0'-6"	1 1/16
AP-2C	3/4 x 6 x 0'-6"	1 3/16
AP-3A	1 x 7 x 0'-7"	1 5/16
AP-3B	1 x 7 x 0'-7"	1 7/16
AP-3C	1 x 7 x 0'-7"	1 9/16
AP-4A	1 x 8 x 0'-8"	1 13/16
AP-5A	1 1/4 x 8 x 0'-8"	2 1/16
AP-5B	1 1/4 x 8 x 0'-8"	2 5/16
AP-6A	1 1/2 x 9 x 0'-9"	2 9/16

LEGEND

REFERENCE DRAWINGS

DWG. NO.	TITLE

REVISIONS

NO.	DATE	BY	DESCRIPTION	W.O.	APP.
E	1-6-76	APM	REDRAWN & REVISED		

PRINT RECORD

PRT.	SEP.	DATE	TO	W.O.
21		4-24-84	CONSTR.	F-1016
25		4-12-84	BIDS	F-1016

ENG. RECORD		DATE
DRAWN	APM	1-6-76
CHECKED	JT	3-28-77
CHECKED		
PROJ. APP.		
DESIGN APP.		

El Paso NATURAL GAS COMPANY

STANDARD ANCHOR BOLTS

SCALE:
W.O.
DWG. NO. STD.-1-M2
REV. E

N21306

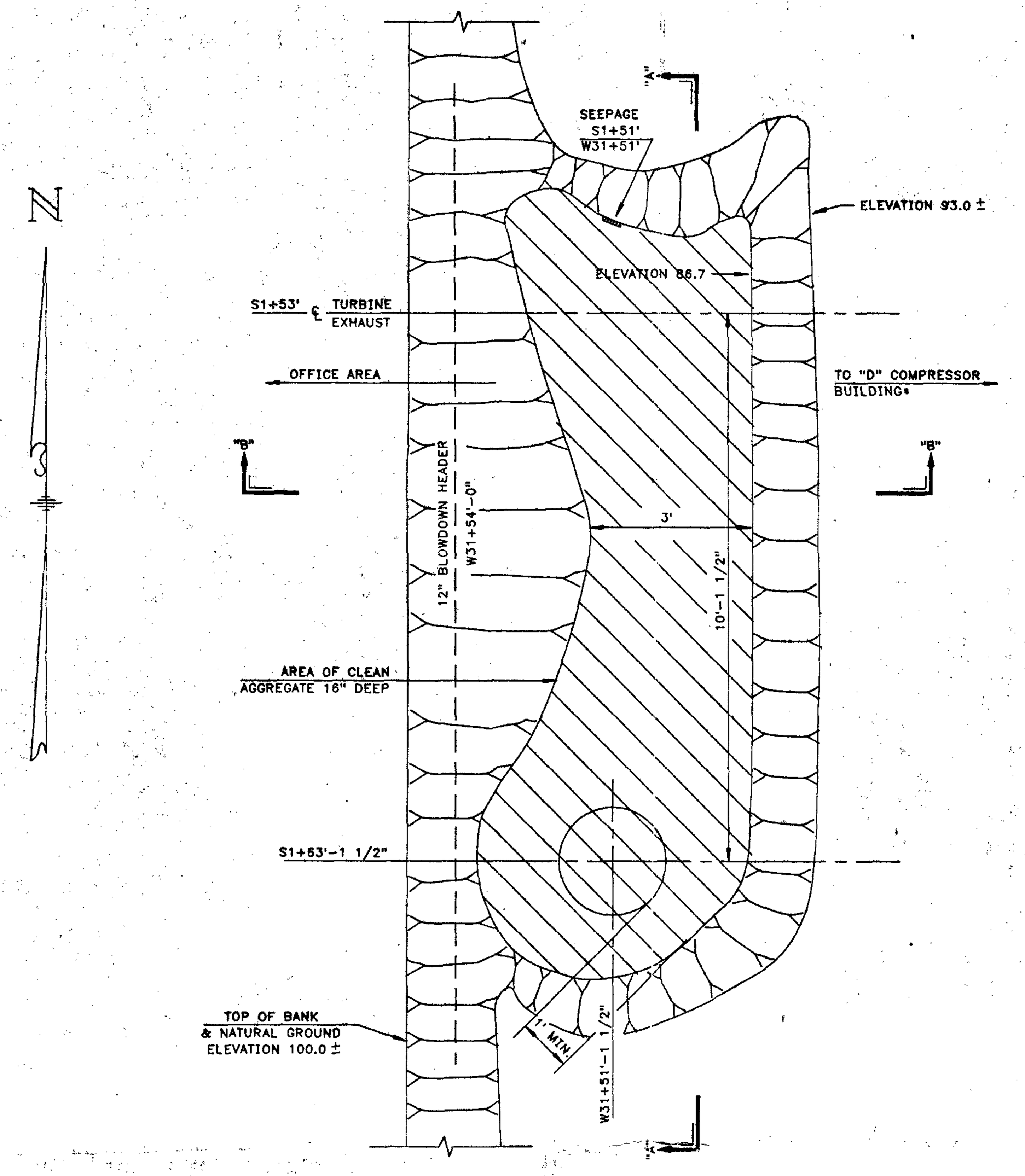

PLAN

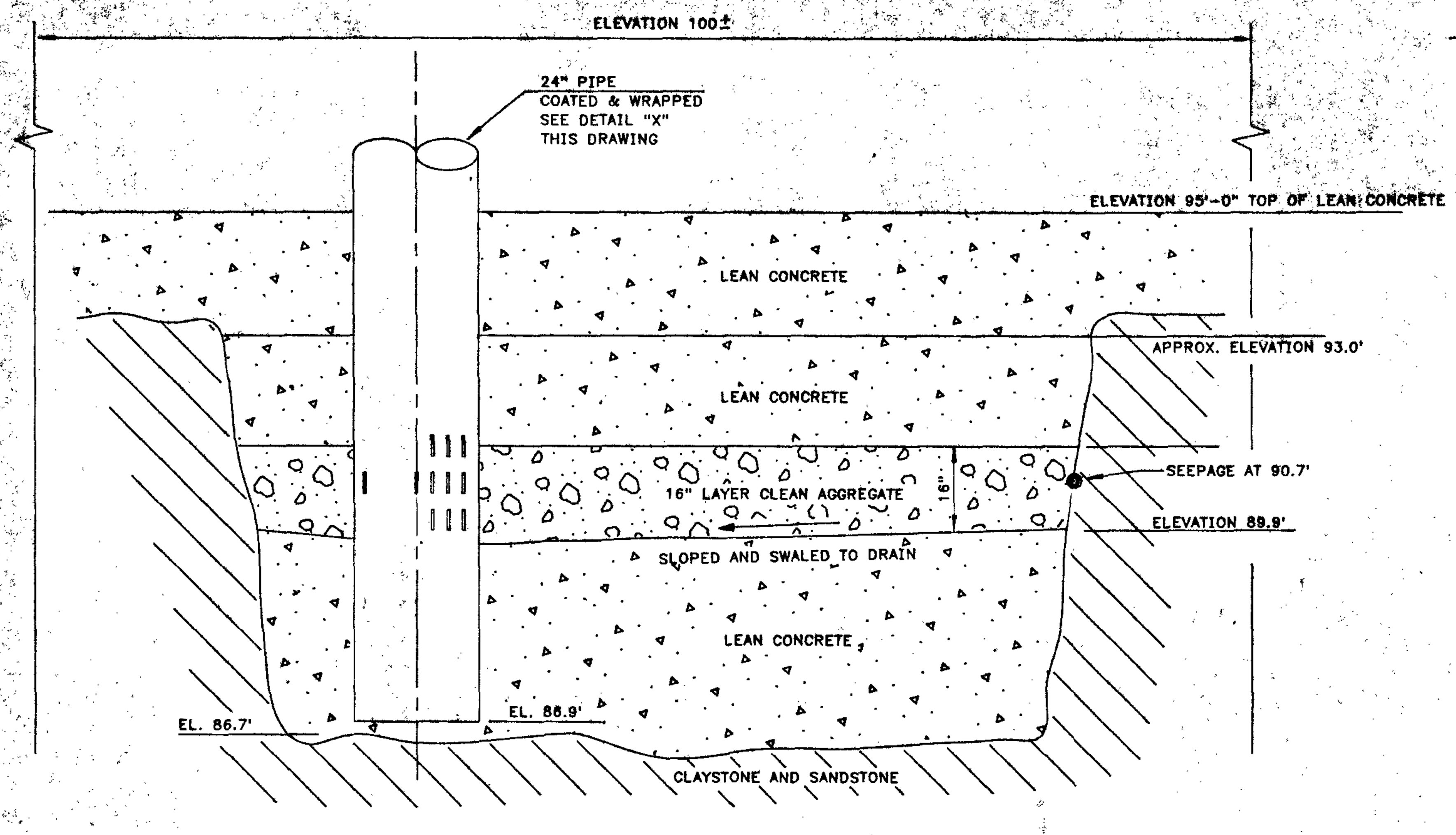

SECTION A–A

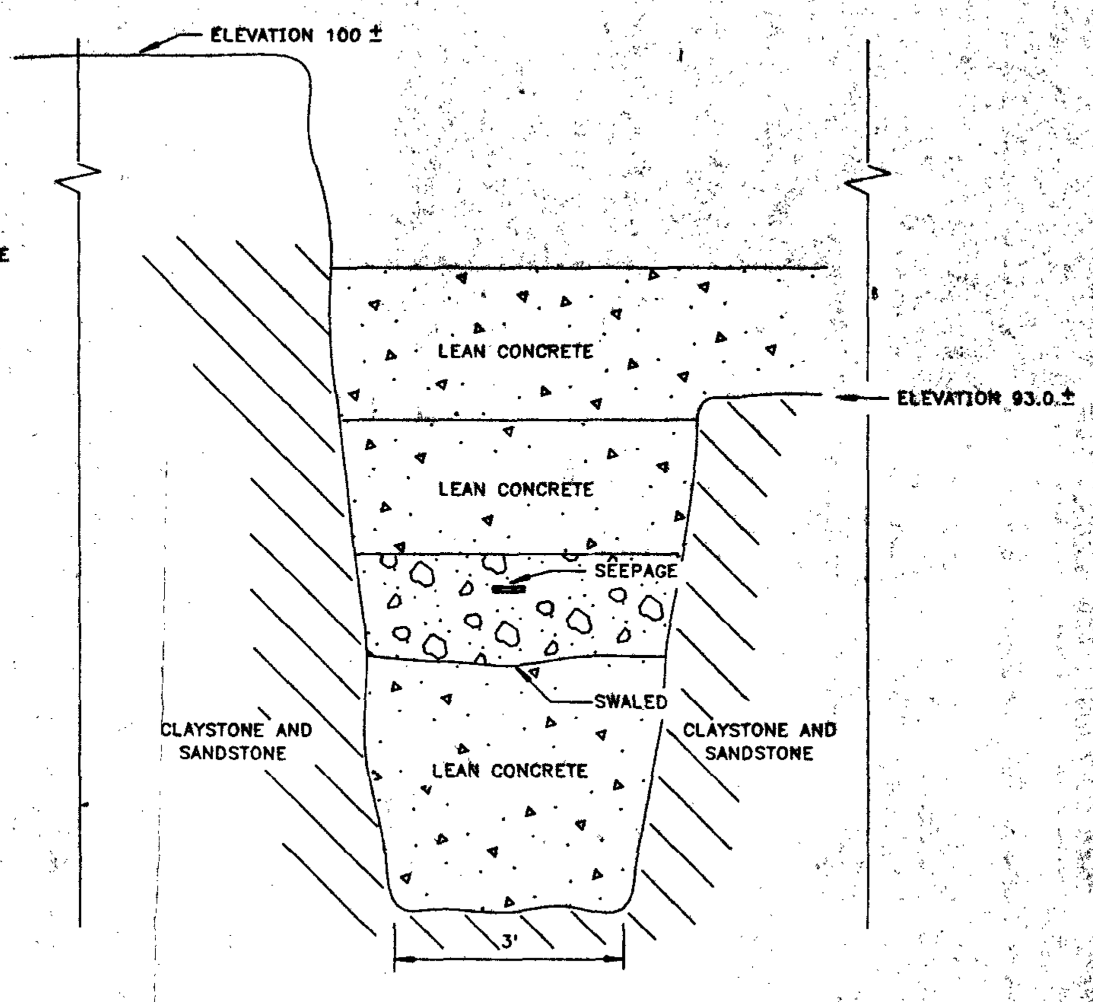

SECTION B–B

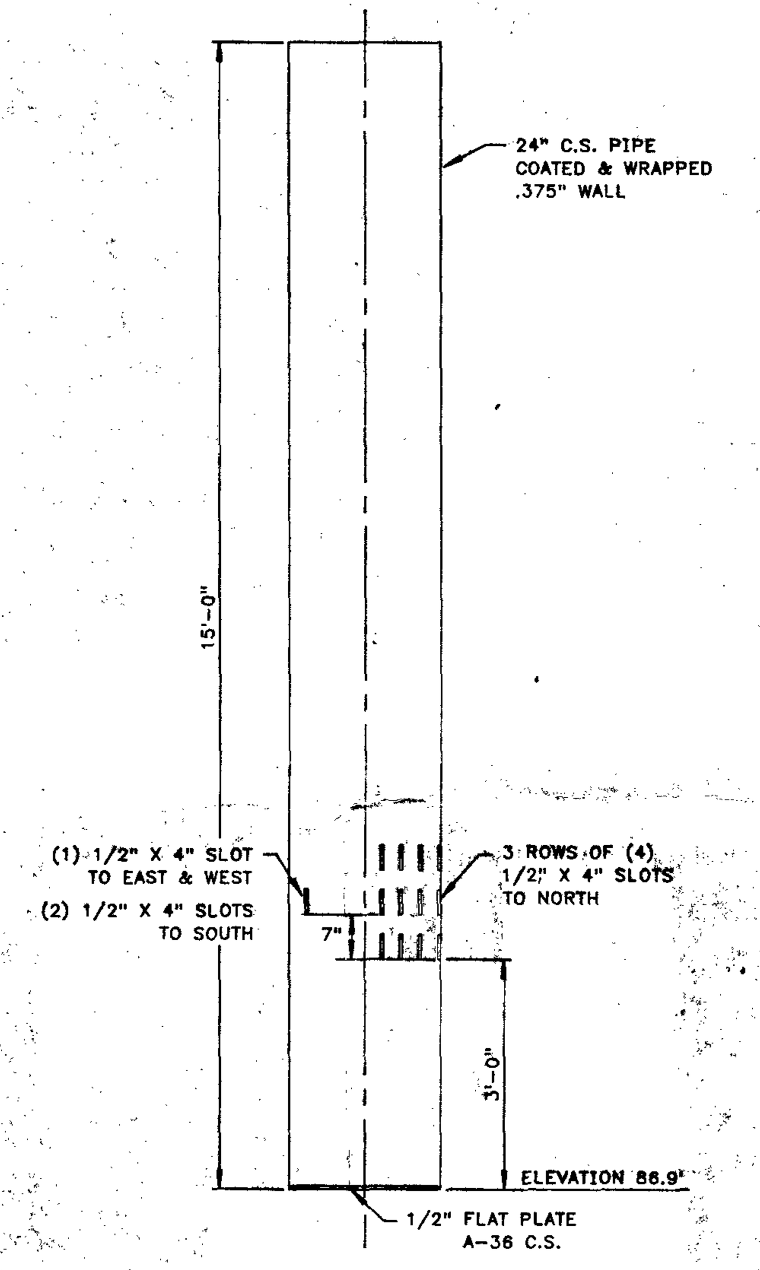

DETAIL "X"

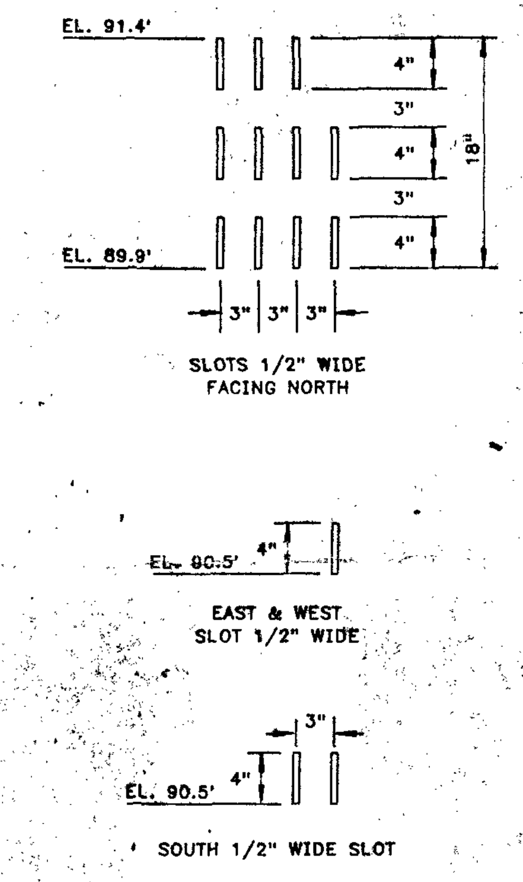

SLOT PATTERN

SCALE: 1" = 1'-0"

LEGEND

REFERENCE DRAWINGS

DWG. NO.	TITLE
2BP-1-P8	BLANCO, MASTER PLOT PLAN

REVISIONS

NO.	DATE	BY	DESCRIPTION	W.O.	APP.

PRINT RECORD

PRT.	SEP.	DATE	TO	W.O.

ENG. RECORD		DATE
DRAFTING DESIGN	GP	2/1/88
COMPUTER GRAPHICS	VM	2/1/88
CHECKED		
PROJECT APPROVAL		
DESIGN APPROVAL		
COMPUTER SAVE NAME	BLA202	

El Paso
NATURAL GAS COMPANY

BLANCO GASOLINE ABSORPTION PLANT
SEEPAGE WELL
PLAN, SECTION AND DETAIL "X"

SCALE: 1/2"=1'-0"
W.O.: S-8668
DWG. NO. 2BP-1-P69
REV.

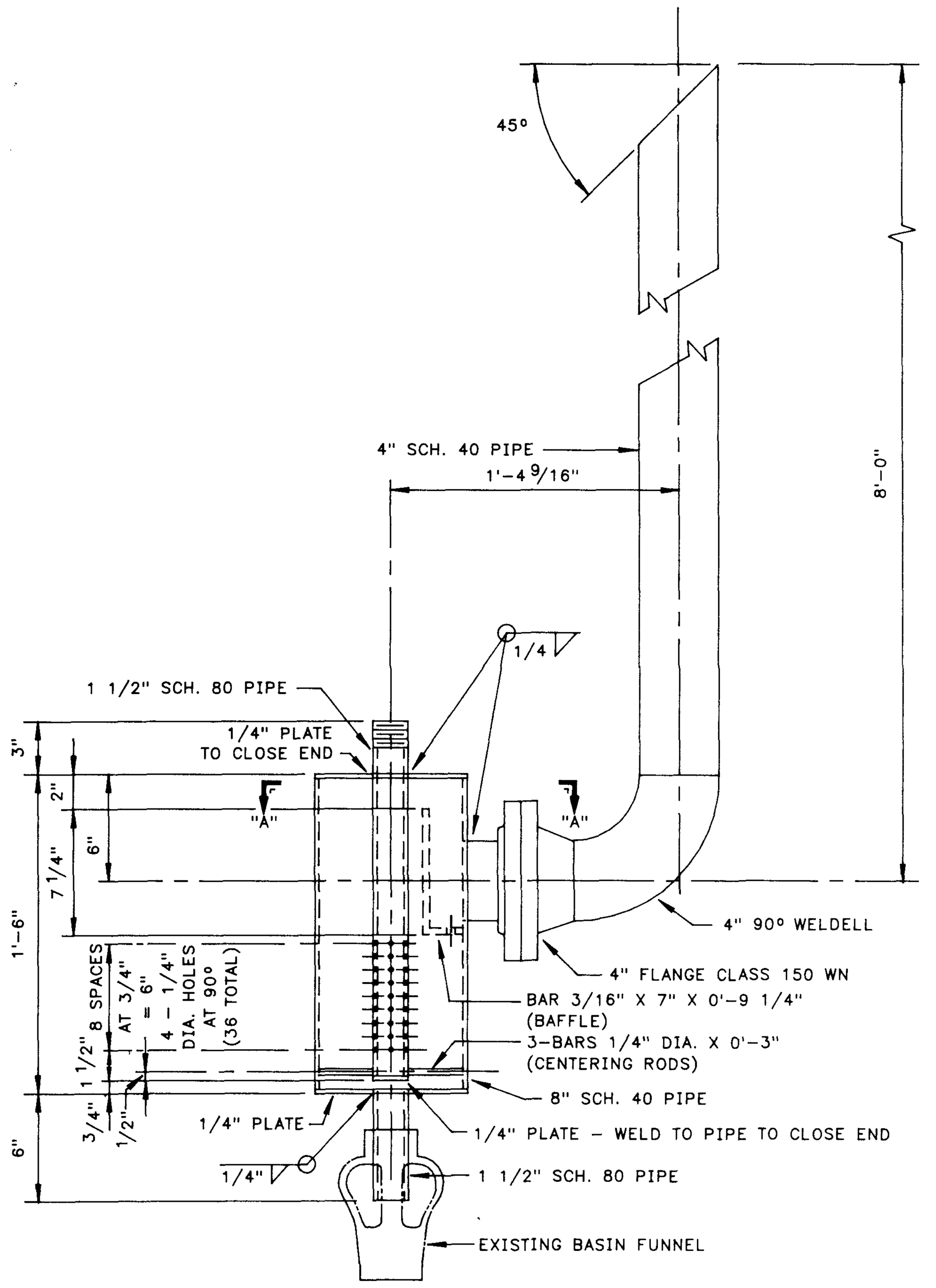

DETAIL "11"

BLOWDOWN BAFFLE FOR V-75

SCALE: 1 1/2" = 1'-0"
W.O. K-5432

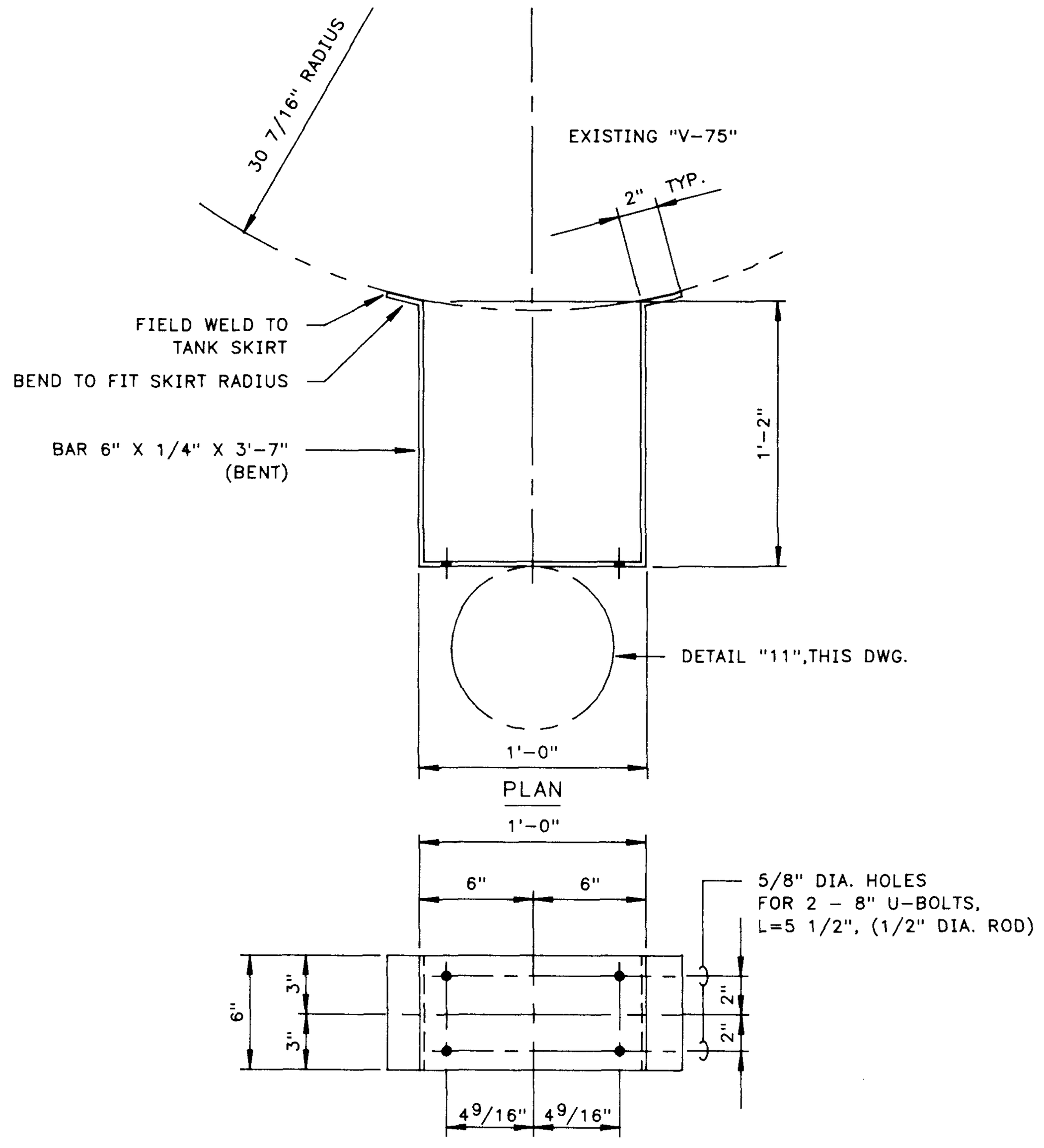

SUPPORT STRAP FOR "V-75"

DETAIL "A"

SCALE: 1 1/2" = 1"-0"

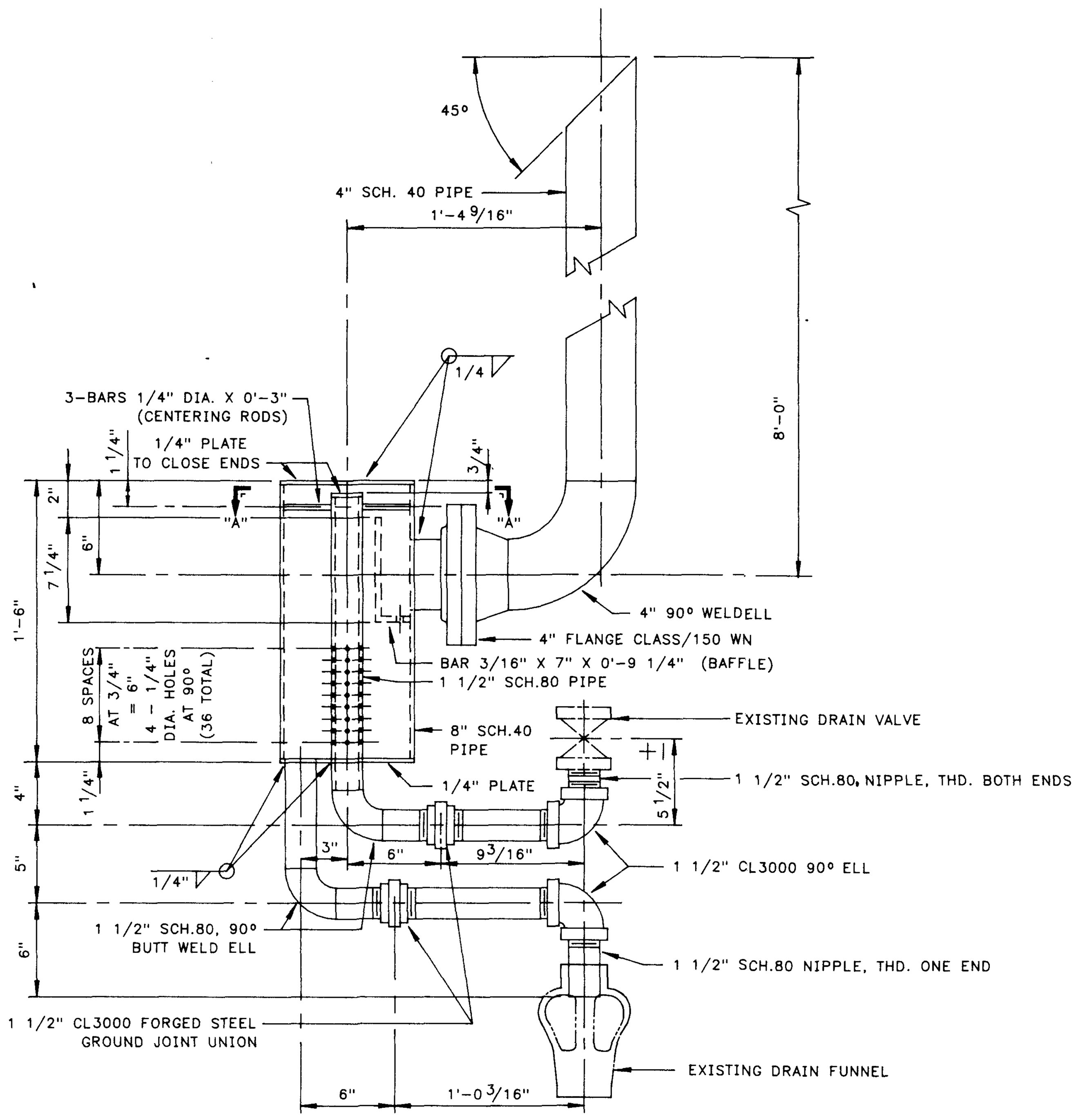

DETAIL "12"

BLOWDOWN BAFFLE FOR V-2001

SCALE: 1 1/2" = 1'-0"
W.O. K-5432

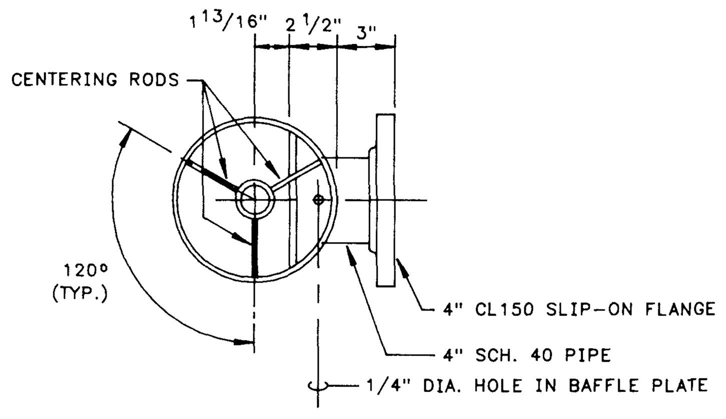

SECTION "A - A"

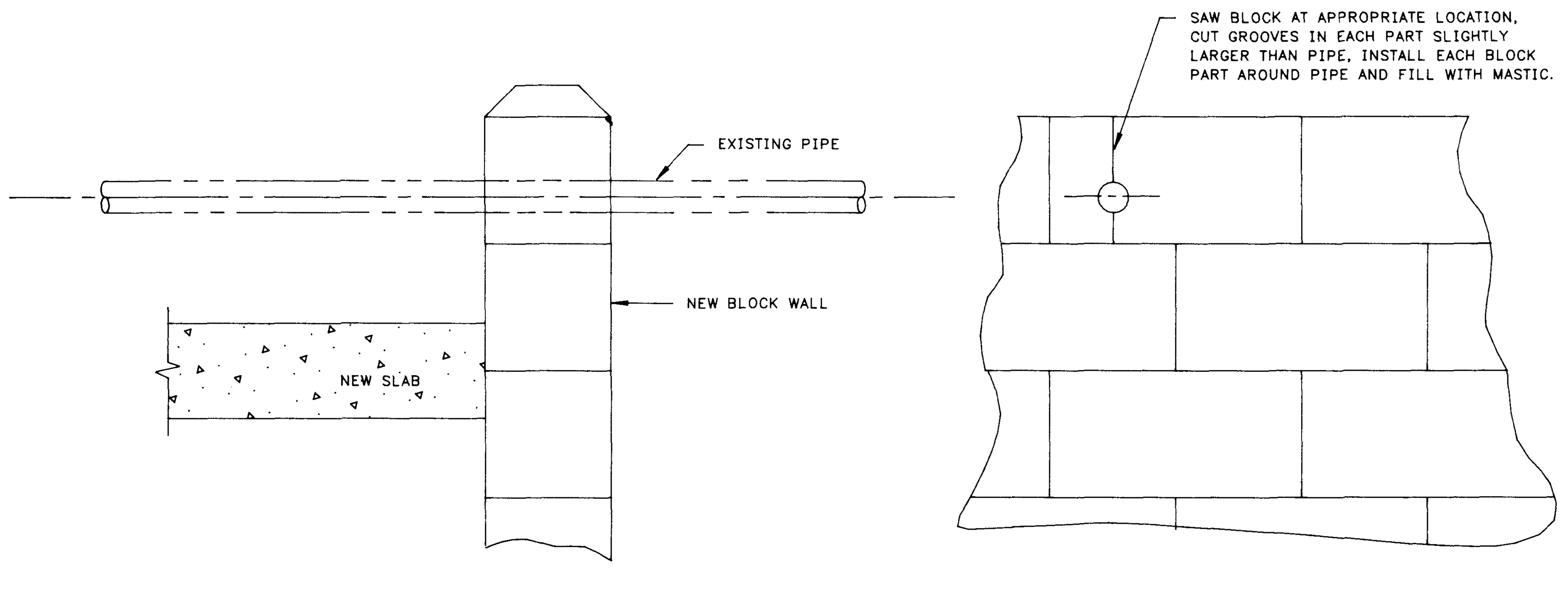

DETAIL "13"

DETAIL OF PIPE PENETRATION
THROUGH CONCRETE BLOCK
SCALE: 1 1/2" = 1'-0"

ELEVATION

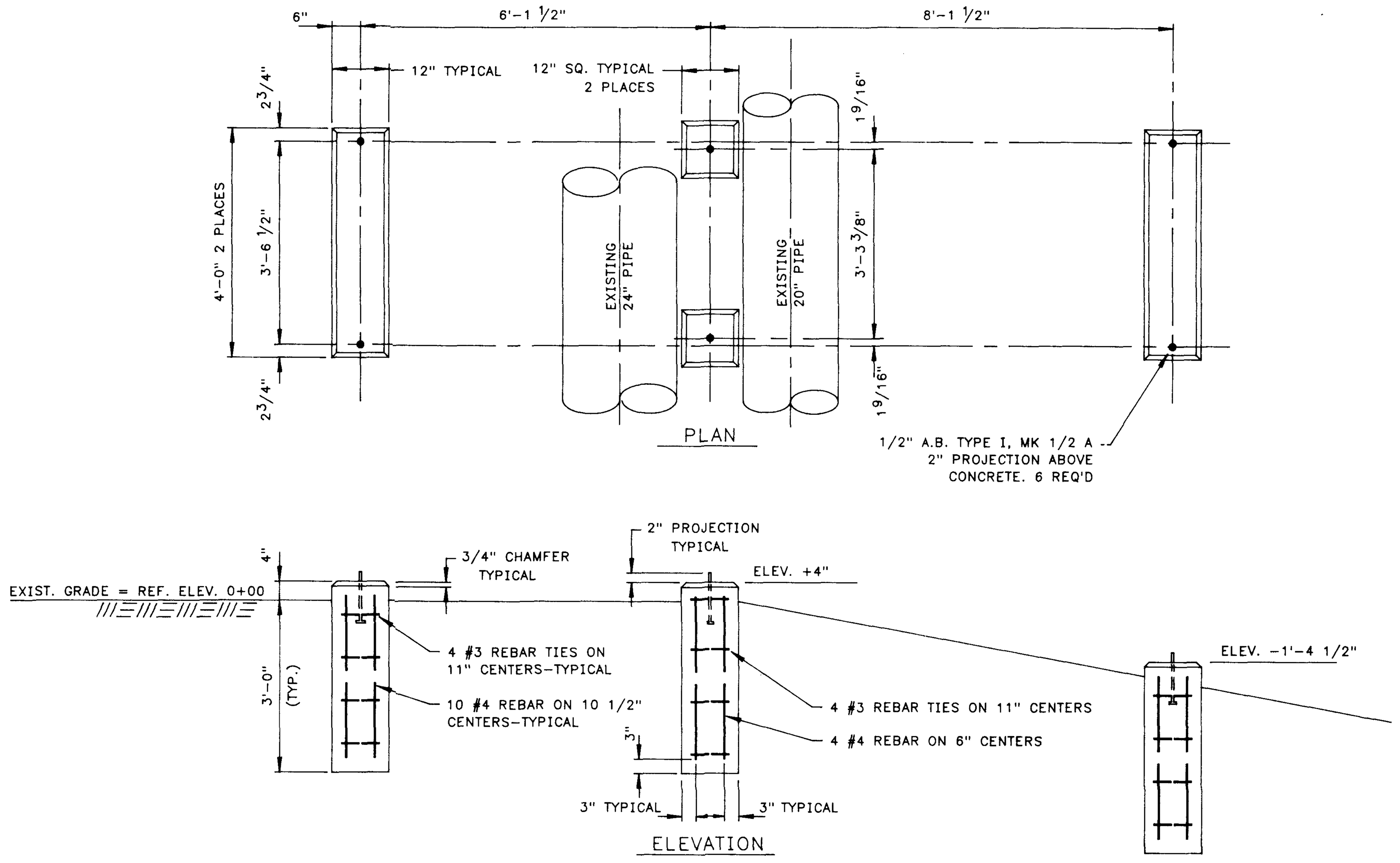

DETAIL "14"

FOUNDATION FOR RELOCATED STILE

2BP-1-M87 SCALE: 1/2" = 1'-0"

W.O. L-3973

DWG. NO.	TITLE
STD-1-M2	STANDARD ANCHOR BOLTS
2BP-1-M90	SEC. CONTAIN. DIKES - PLANS
2BP-1-M87	LUBE OIL TANKS,"A","B","C" PLANT-PLAN

REFERENCE DRAWINGS

NO.	DATE	BY	DESCRIPTION	W.O.	APP.

REVISIONS

PRT.	SEP.	DATE	TO	W.O.
1		[illegible]	[illegible]	
1		[illegible]	[illegible]	

PRINT RECORD

ENG. RECORD		DATE
DRAFTING DESIGN	DPH	10/89
COMPUTER GRAPHICS	JT	10/18/89
CHECKED	[illegible]	10/24/89
PROJECT APPROVAL	[illegible]	10/23/89
DESIGN APPROVAL		
COMPUTER SAVE NAME	BLA497	

El Paso
NATURAL GAS COMPANY

BLANCO PLANT
SECONDARY CONTAINMENT DIKES
CONSTRUCTION DETAILS

SCALE: SHOWN
W.O.: SEE DWG.
DWG. NO. 2BP-1-M95
REV.

10/21/89

FM9 (Rev. 8/9/89)

LEGEND

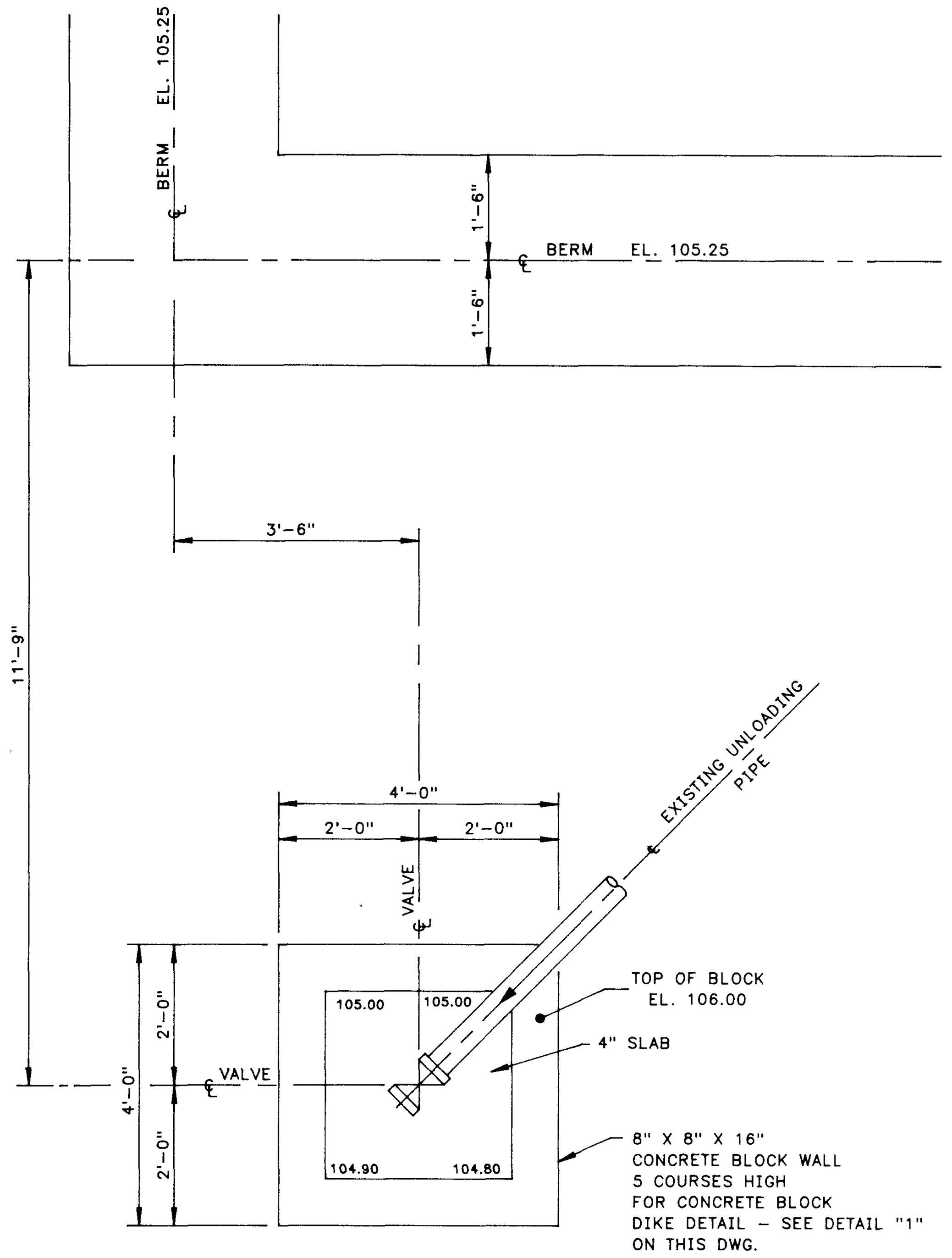

CONTAINMENT DIKE
SOUTH - DRAIN VALVE
2BP-1-M93

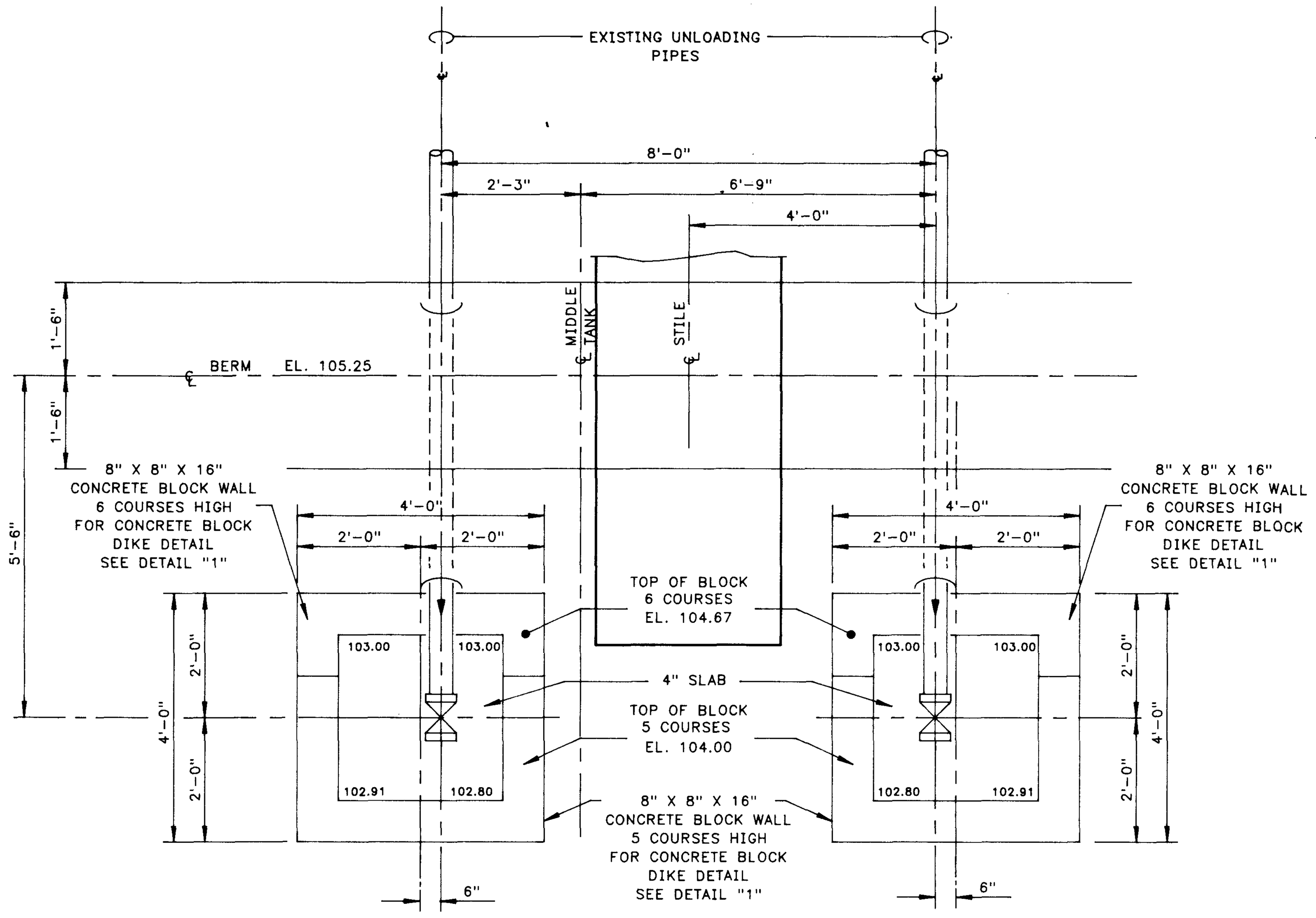

CONTAINMENT DIKE
MIDDLE TANK - DRAIN VALVES
2BP-1-M93

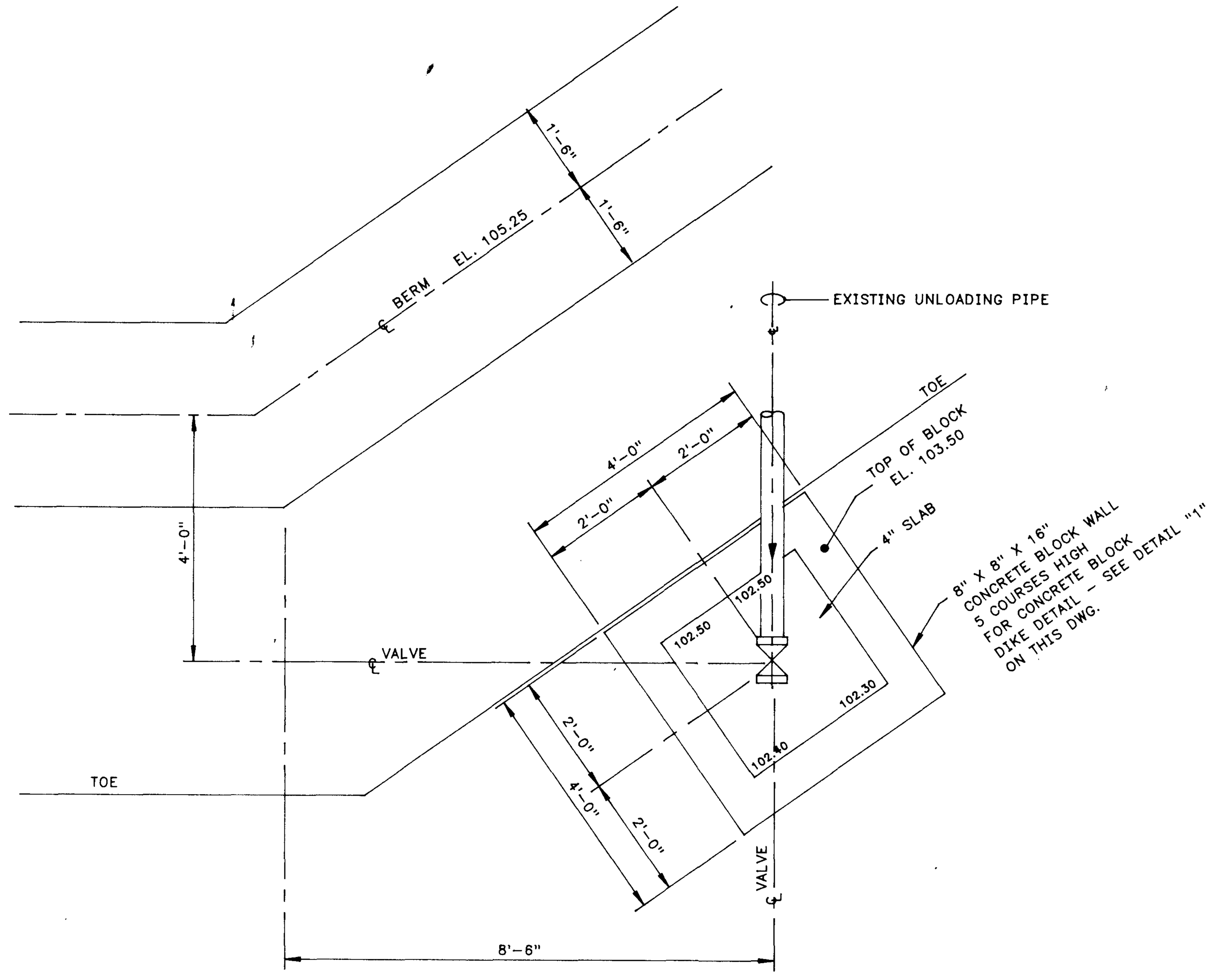

CONTAINMENT DIKE
NORTH - DRAIN VALVE
2BP-1-M93

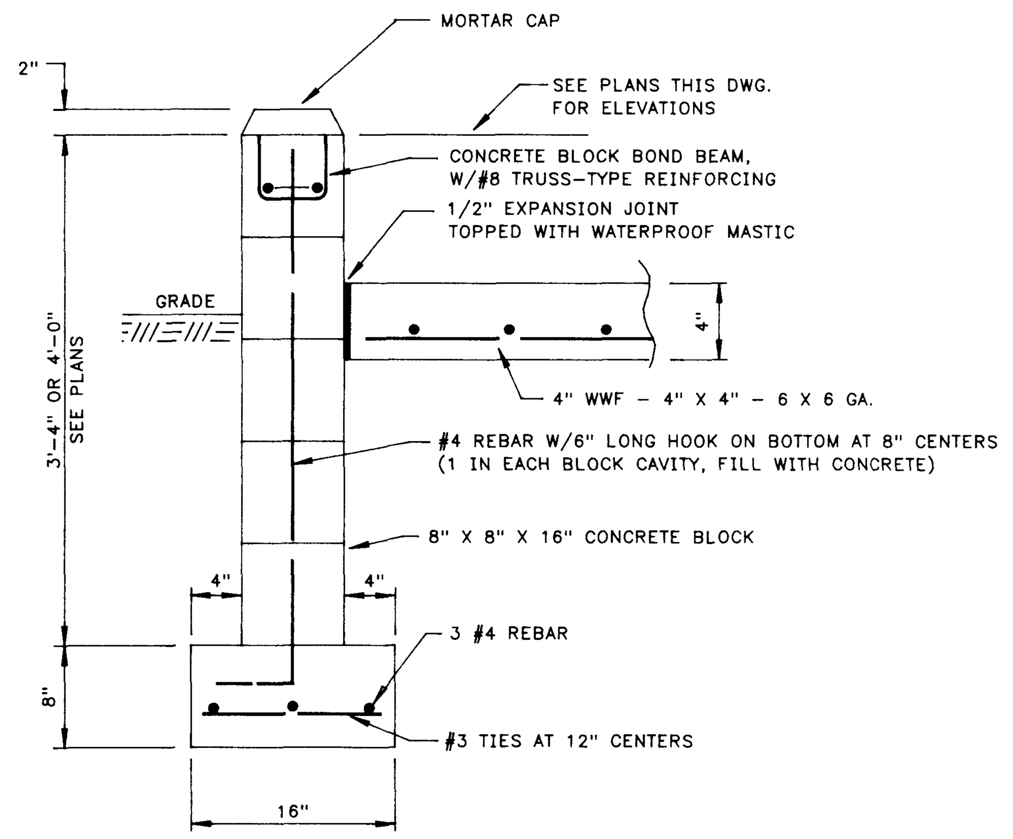

DETAIL "1"
TYPICAL CONCRETE BLOCK DIKE
SCALE: 1" = 1'-0"

DWG. NO.	TITLE
2BP-1-M92	SECONDARY CONTAINMENT DIKES BOTTOMS
	STORAGE AREA PLAN

REFERENCE DRAWINGS

NO.	DATE	BY	DESCRIPTION	W.O.	APP.

REVISIONS

PRT.	SEP.	DATE	TO	W.O.

PRINT RECORD

ENG. RECORD		DATE
DRAFTING DESIGN	AEG	10/9/89
COMPUTER GRAPHICS	LG	10/20/89
CHECKED	AEG	10/23/89
PROJECT APPROVAL		10/23/89
DESIGN APPROVAL		
COMPUTER SAVE NAME	BLA498	

El Paso NATURAL GAS COMPANY

BLANCO PLANT
BLANCO FIELD DRIP STORAGE
SECONDARY CONTAINMENT DIKES
DETAILS

SCALE: 1/2"=1'-0" W.O.: A-8770 DWG. NO. 2BP-1-M96 REV.

LEGEND

FM9 (Rev. 8/9/89)

10/21/89

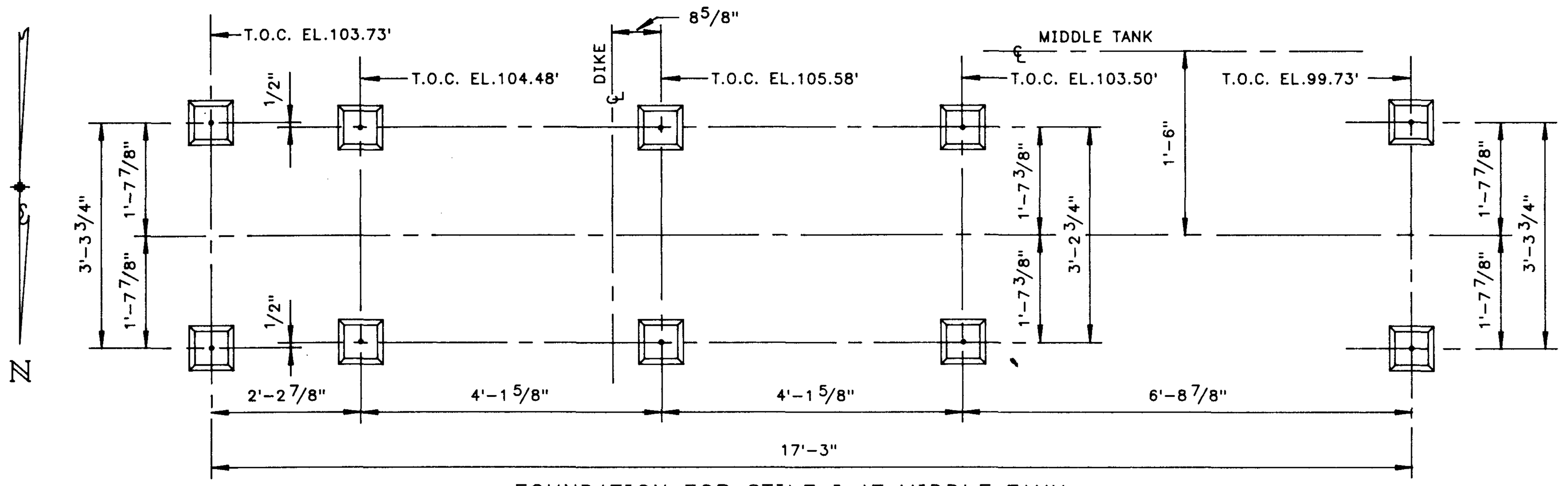

FOUNDATION FOR STILE I AT MIDDLE TANK

SCALE: 1/2" = 1'0"

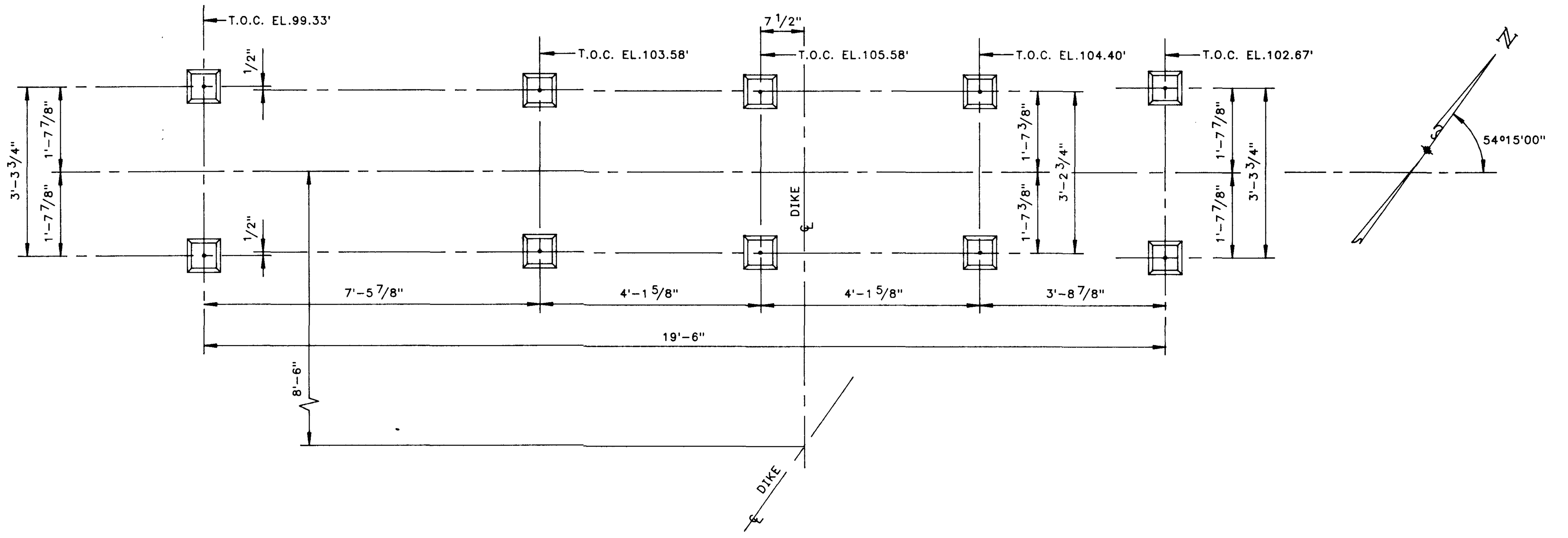

FOUNDATION FOR STILE II SOUTH OF HEATER TREATER

SCALE: 1/2" = 1'0"

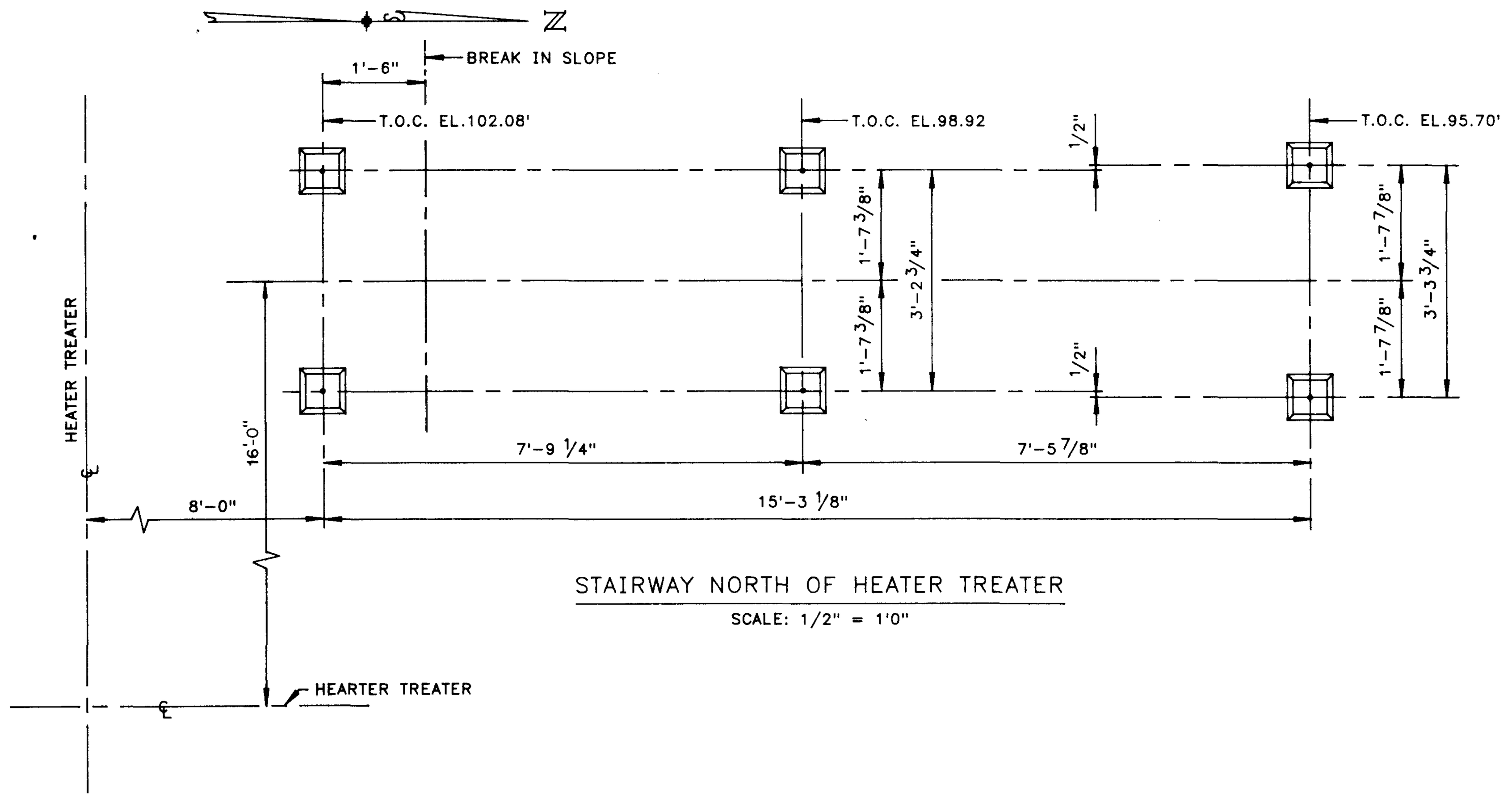

STAIRWAY NORTH OF HEATER TREATER

SCALE: 1/2" = 1'0"

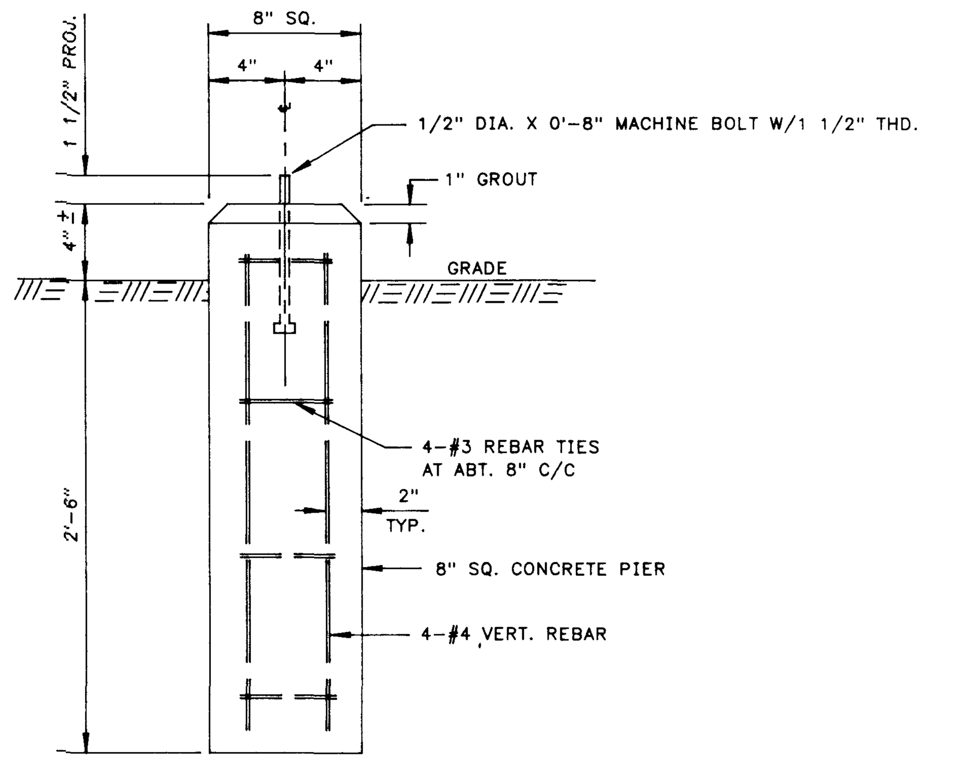

TYPICAL SUPPORT PIER

SCALE: 1 1/2" = 1'-0"

FM9 (Rev. 8/9/89) LEGEND

DWG. NO.	TITLE
2BP-1-M93	FIELD DRIP STORAGE PLAN
2BP-1-M101	STILES PLAN & DETAILS

REFERENCE DRAWINGS

NO.	DATE	BY	DESCRIPTION	W.O.	APP.

REVISIONS

PRT.	SEP.	DATE	TO	W.O.

PRINT RECORD

ENG. RECORD		DATE
DRAFTING DESIGN	AEG	10/21/89
COMPUTER GRAPHICS	FB	10/21/89
CHECKED		
PROJECT APPROVAL		
DESIGN APPROVAL		
COMPUTER SAVE NAME	BLA506	

El Paso NATURAL GAS COMPANY

BLANCO PLANT
BLANCO FIELD DRIP STORAGE
SECONDARY CONTAINMENT DIKE
FOUNDATIONS FOR STILES

SCALE: NOTED
W.O.: A-8770
DWG. NO. 2BP-1-M102
REV.

10/23/89

NOTES:
1. ALL DIKE SLOPES ARE 1 1/2 TO 1 EXCEPT WHERE NOTED.

LEGEND

REFERENCE DRAWINGS

DWG. NO.	TITLE
2BP-1-M86	PLOT PLAN
2BP-1-M101	FIELD DRIP STORAGE DIKE - STILES
2BP-1-M96	FIELD DRIP STORAGE DIKE - DETAILS
2BP-1-M100	FIELD DRIP STORAGE DIKE - DETAILS

REVISIONS

NO.	DATE	BY	DESCRIPTION	W.O.	APP.

PRINT RECORD

PRT.	SEP.	DATE	TO	W.O.
1	-	10-23-89	INSPECTOR	"
4	-	10-23-89	CONTRACTS	A-8770

ENG. RECORD		DATE
DRAFTING DESIGN	DPH	10/13/89
COMPUTER GRAPHICS	PD	10/14/89
CHECKED	AEG	10/23/89
PROJECT APPROVAL	CBB	10/23/89
DESIGN APPROVAL		
COMPUTER SAVE NAME	BLA501	

El Paso
NATURAL GAS COMPANY

BLANCO PLANT
BLANCO FIELD DRIP STORAGE
SECONDARY CONTAINMENT DIKE
PLAN

SCALE: 1/8"=1'
W.O.: A-8770
DWG. NO. 2BP-1-M93
REV.

FM9 (Rev. 8/9/89)

10/23/89

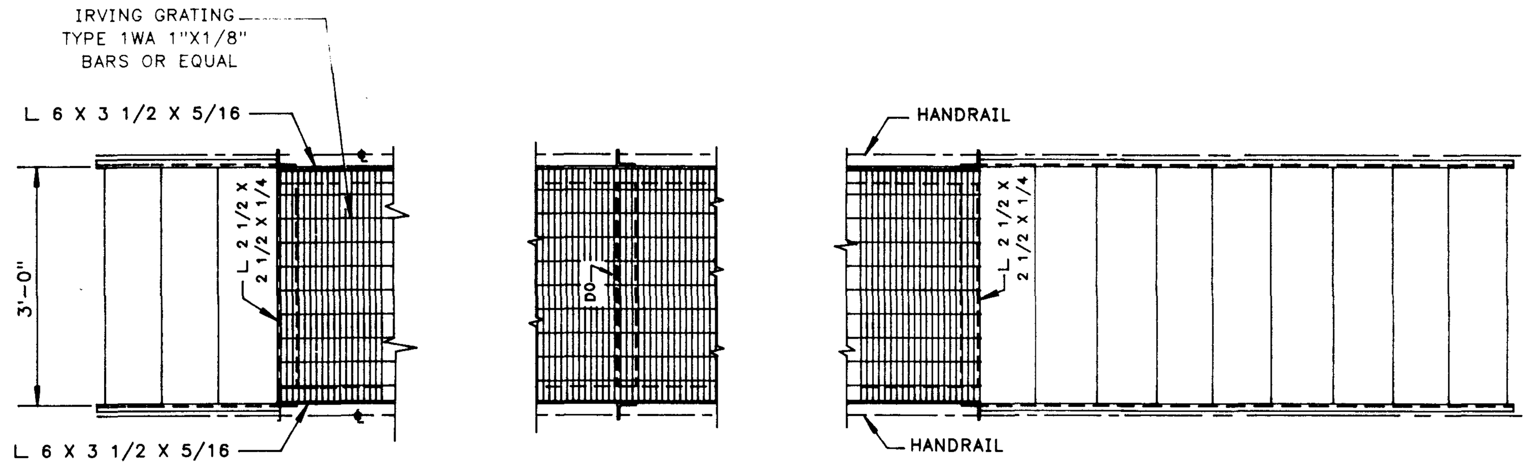

PLAN

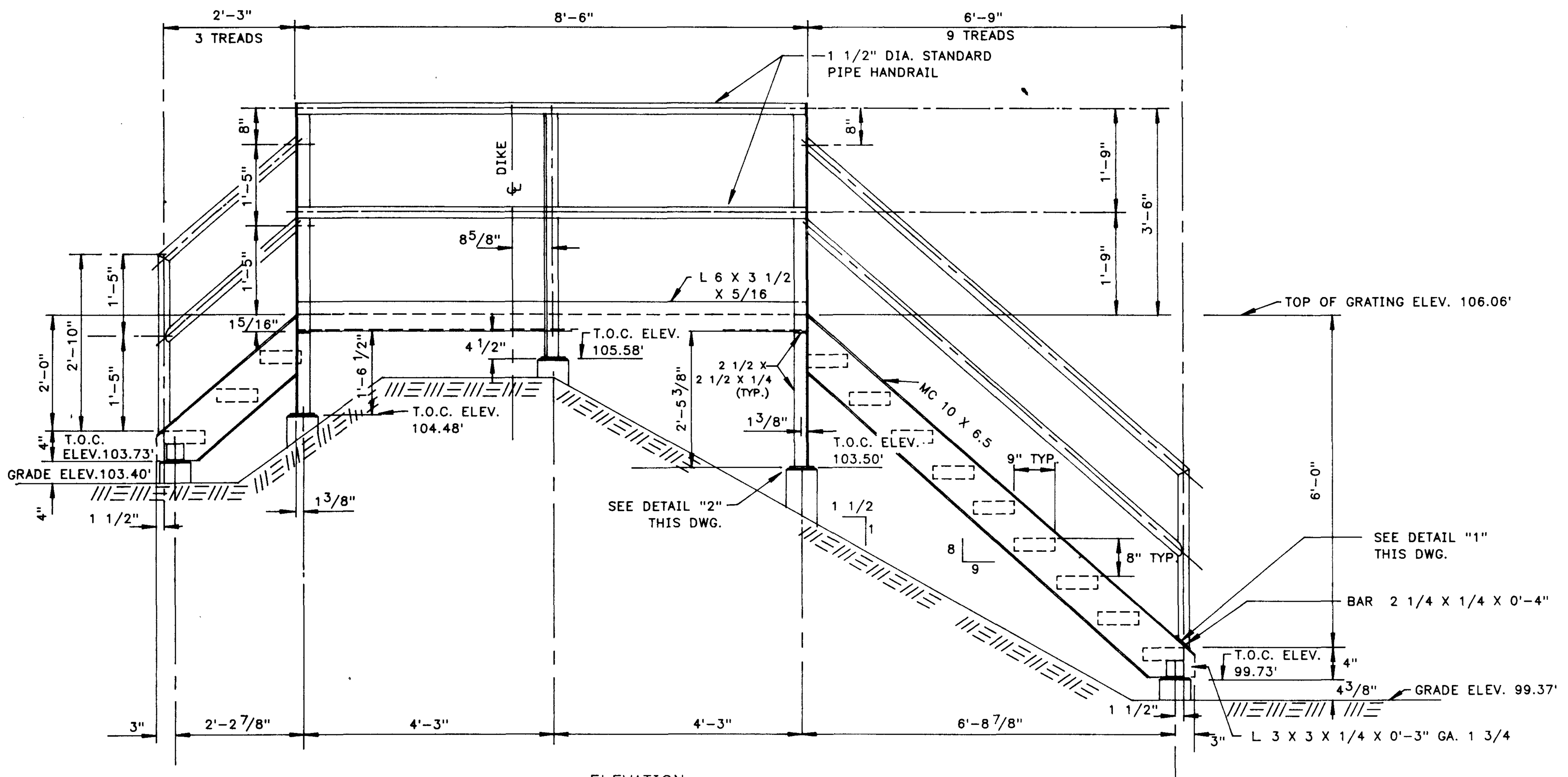

ELEVATION

STILE I

(1-REQUIRED)

SCALE: 1/2" = 1'-0"
DWG. 2BP-1-M93

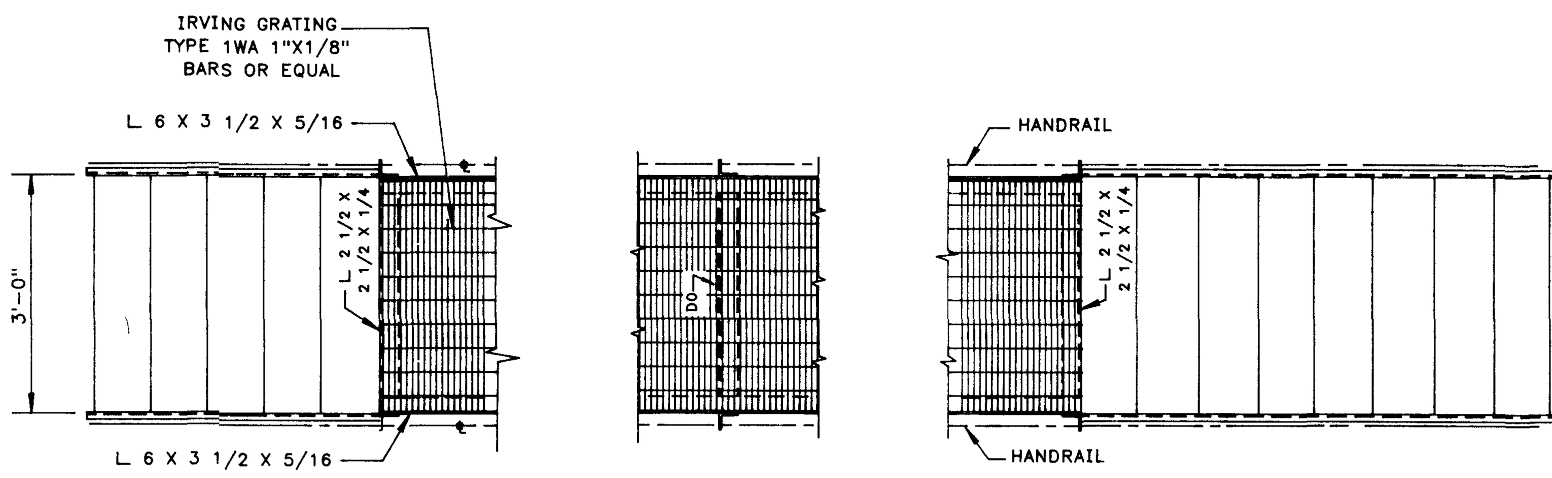

PLAN

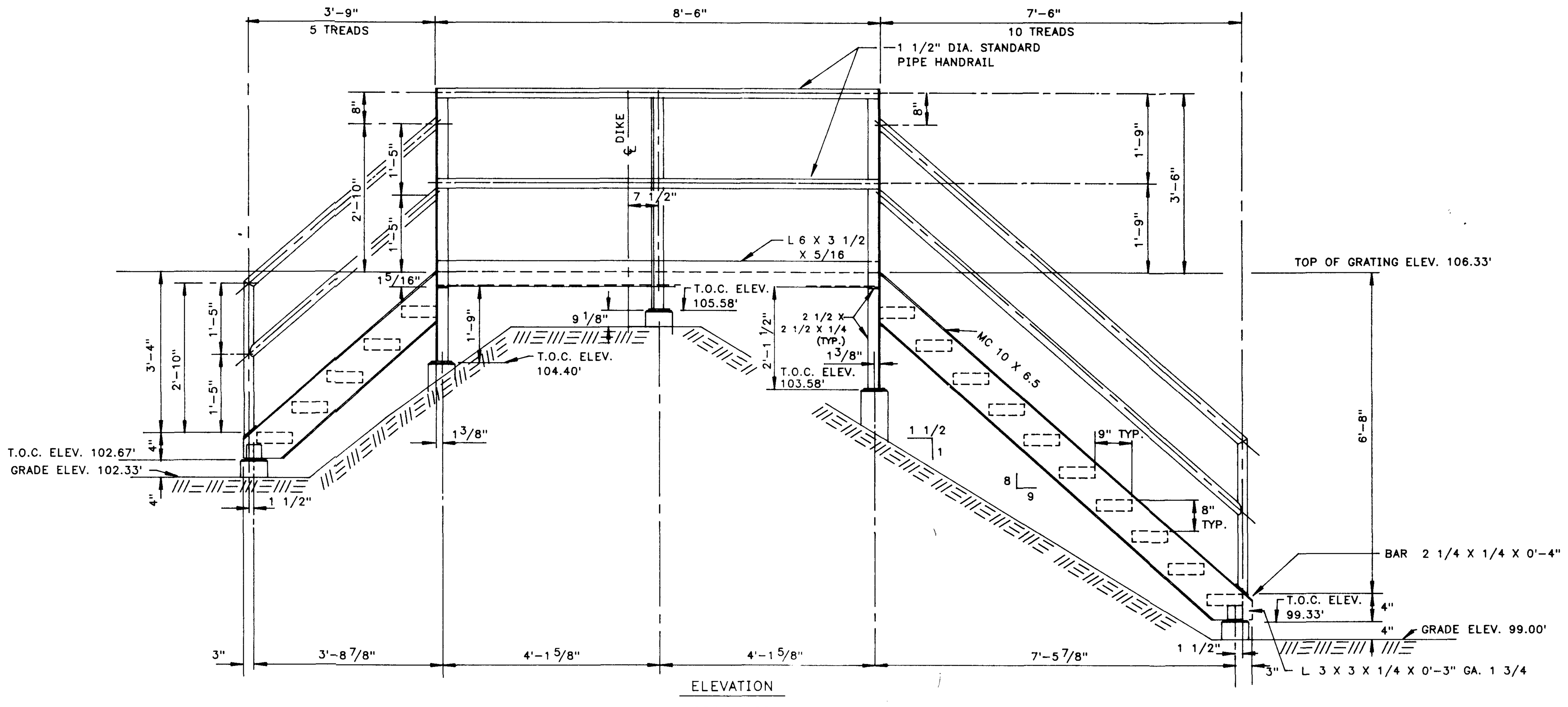

ELEVATION

STILE II

(1-REQUIRED)

SCALE: 1/2" = 1'-0"
DWG. 2BP-1-M93

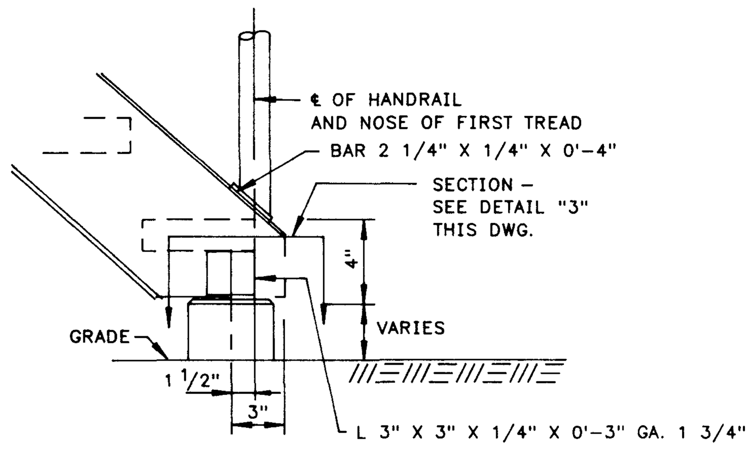

TYPICAL STILE DETAIL "1"

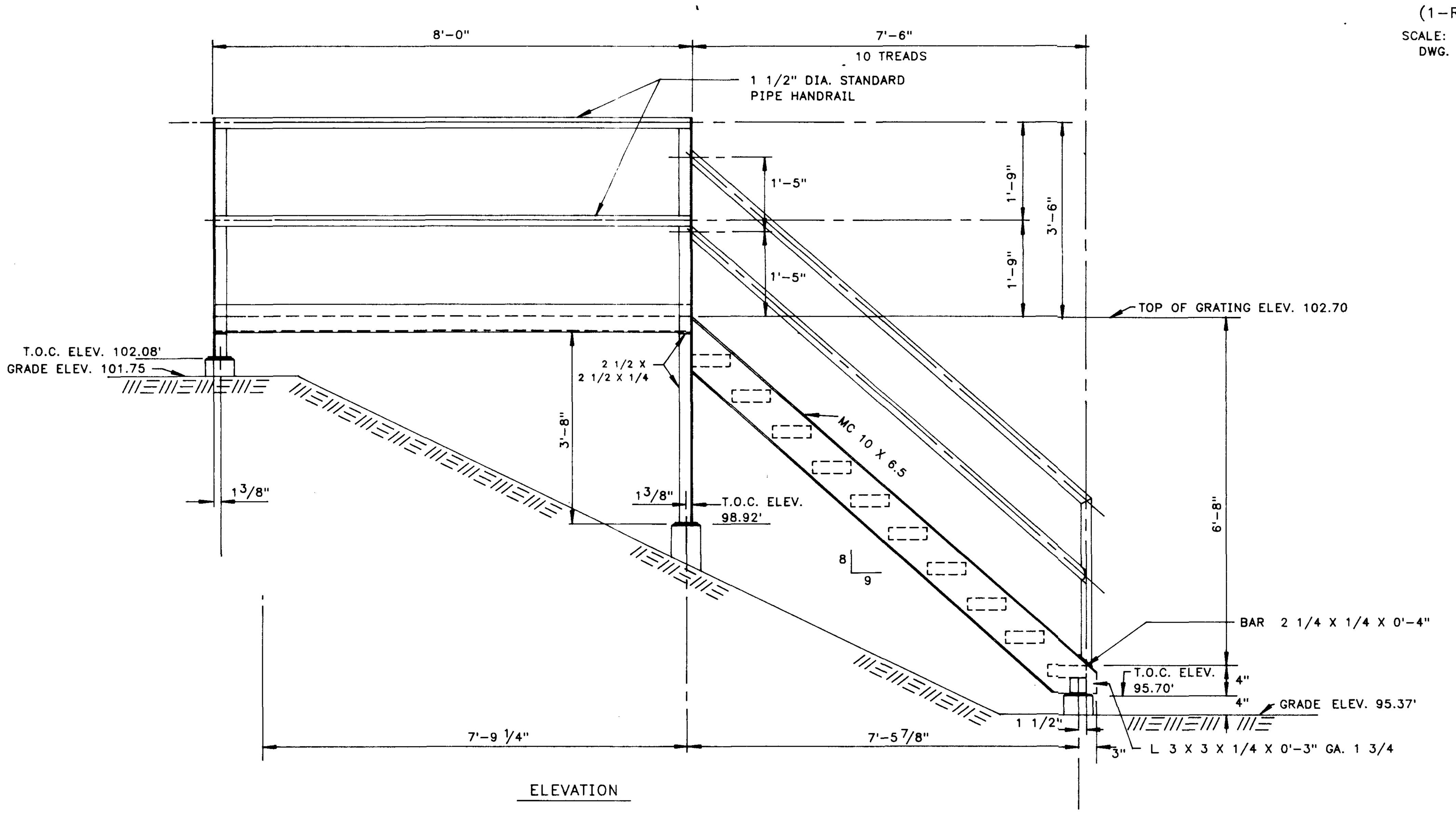

ELEVATION

STAIRWAY

(1-REQUIRED)

SCALE: 1/2" = 1'-0"
DWG. 2BP-1-M93

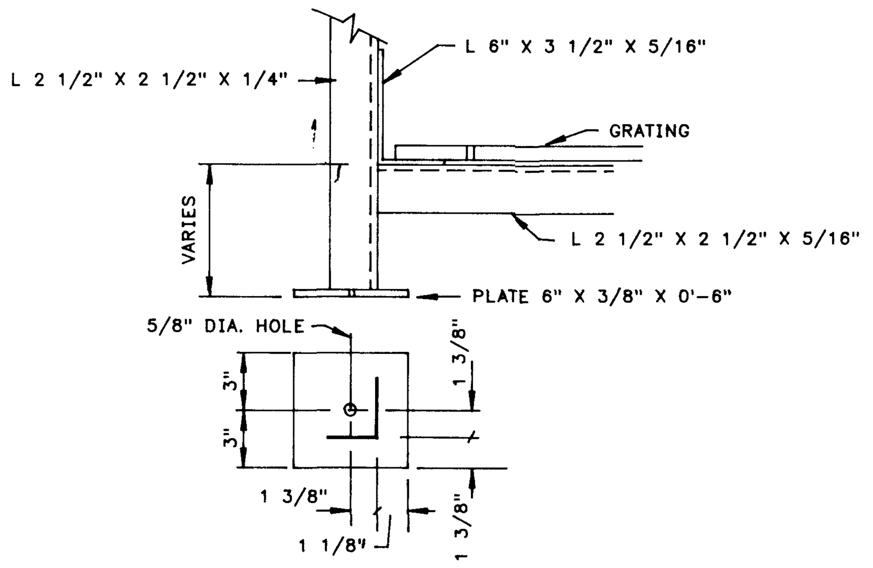

DETAIL "2"

SCALE: 1 1/2" = 1'-0"

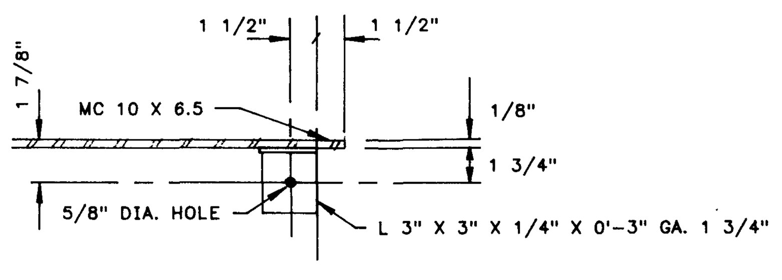

DETAIL "3"

SCALE; NONE

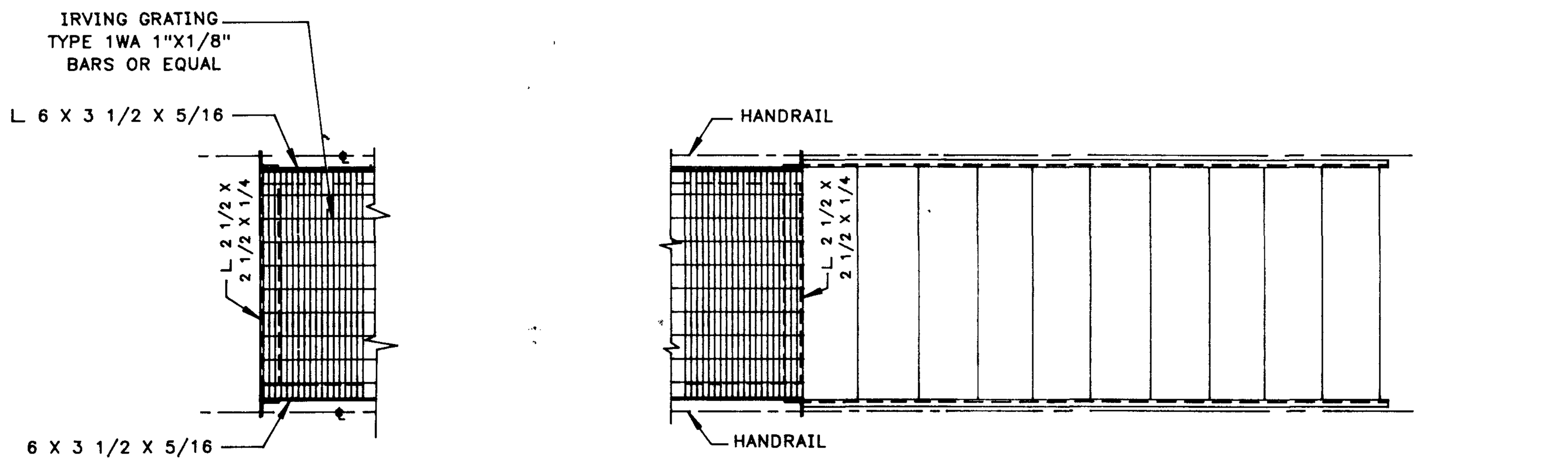

PLAN
FOR STAIRWAY

LEGEND

REFERENCE DRAWINGS

DWG. NO.	TITLE
2BP-1-M93	BLANCO FIELD DRIP STORAGE-PLAN
2BP-1-M102	FOUNDATIONS FOR STILES

REVISIONS

NO.	DATE	BY	DESCRIPTION	W.O.	APP.

PRINT RECORD

PRT.	SEP.	DATE	TO	W.O.
1	–	"	INSPECTOR	"
4	–	10-23-89	CONTRACTS	A-8770

ENG. RECORD		DATE
DRAFTING DESIGN	AEG	9/15/89
COMPUTER GRAPHICS	FB	10/20/89
CHECKED	AEG	10/23/89
PROJECT APPROVAL	[signature]	10/23/89
DESIGN APPROVAL		
COMPUTER SAVE NAME	BLA505	

El Paso
NATURAL GAS COMPANY

BLANCO PLANT
BLANCO FIELD DRIP STORAGE
SECONDARY CONTAINMENT DIKE
STILES PLAN AND DETAILS

SCALE: NOTED
W.O.: A-8770
DWG. NO. 2BP-1-M101
REV.

FM9 (Rev. 8/9/89)

10/23/89

NO.	REVISIONS	DATE	BY	CK'D	APP'D
1	BROUGHT UP TO DATE	3/4/59	A.P.		
2	LINE 10K-4 ABANDONED & BLOWOFF LINE RELOCATED				
3	REPLACE 240' 8 5/8" BOILER E.D. & 240' 8 5/8" WATER TREATER DRAIN W.O./K-2491 — ALSO REPLACE 8" RAW WATER LINE PER AS BUILT. W.O./K-2477	6/7/74			

REFERENCE DRAWINGS	
18901-8	Storage & Shipping Area Equipment Layout
18901-25	Underground Piping - Plant Area
18901-27	Underground Piping - Burn Pit Area
A-592	EPNG - Existing Underground Piping
A-593	EPNG - Existing Underground Piping
2BP-1-E	EPNG - Plant Area Plot Plan
18901-15	General Piping - Shipping Pump Bldg.
18912-1	Prod. & L.G. Storage Area
18913-1	Shipping Pump House

PRINT RECORD: San Juan As Built 6-18-74; San Juan As Built 9/24/74; BID. REF. K5431 8/23/89

ENG. RECORD		
DRAWN	Bill O+ts	3-21-56
CHECKED		
MECH. CK.		
STRUCT. CK.		
PIPING CK.		
ELECT. CK.		
PROCESS		
APPROVED		

Stearns-Roger
THE STEARNS-ROGER MFG. CO. DENVER, COLORADO

UNDERGROUND PIPING
STORAGE AREA
BLANCO B GASOLINE PLANT
EL PASO NATURAL GAS CO. FARMINGTON, NEW MEXICO

SCALE 1" = 20'-0" ORDER NO. A-58000 M.L. NO.

DWG. NO. 18901 SHEET NO. 26 REV. 3

2BP-8-P279

1-56 1000 #125 WHITEX

NOTES:

1. ● DENOTES SPOT ELEVATION ON SLAB.
2. EXTEND 6" PVC DRAINAGE PIPE SOUTHWARD, SLOPING 6" PER 100' OR MORE TO MAINTAIN 2'-0" COVER, UNTIL GROUND BREAKS ABRUPTLY & PIPE EMERGES, APPROX. 150'.

LEGEND

DWG. NO.	TITLE
2BP-1-M99	STILES, PLAN & DETAILS
2BP-1-M98	GUARD RAIL DETAILS
2BP-1-M97	BOTTOMS STORAGE AREA DETAILS
2BP-1-M86	LOCATION PLAN

REFERENCE DRAWINGS

NO.	DATE	BY	DESCRIPTION	W.O.	APP.

REVISIONS

PRT.	SEP.	DATE	TO	W.O.

PRINT RECORD

ENG. RECORD		DATE
DRAFTING DESIGN	AEG	9/15/89
COMPUTER GRAPHICS	FB	10/12/89
CHECKED	AEG	10/22/89
PROJECT APPROVAL		10/23/89
DESIGN APPROVAL		
COMPUTER SAVE NAME	BLA491	

El Paso NATURAL GAS COMPANY

BLANCO GASOLINE ABSORPTION PLANT
SECONDARY CONTAINMENT DIKES
BOTTOMS STORAGE AREA PLAN

SCALE: 3/16"=1'-0" | W.O.: K-5431 | DWG. NO. 2BP-1-M92 | REV.

EM9 (Rev. 8/9/89)

10/21/89